SS403761

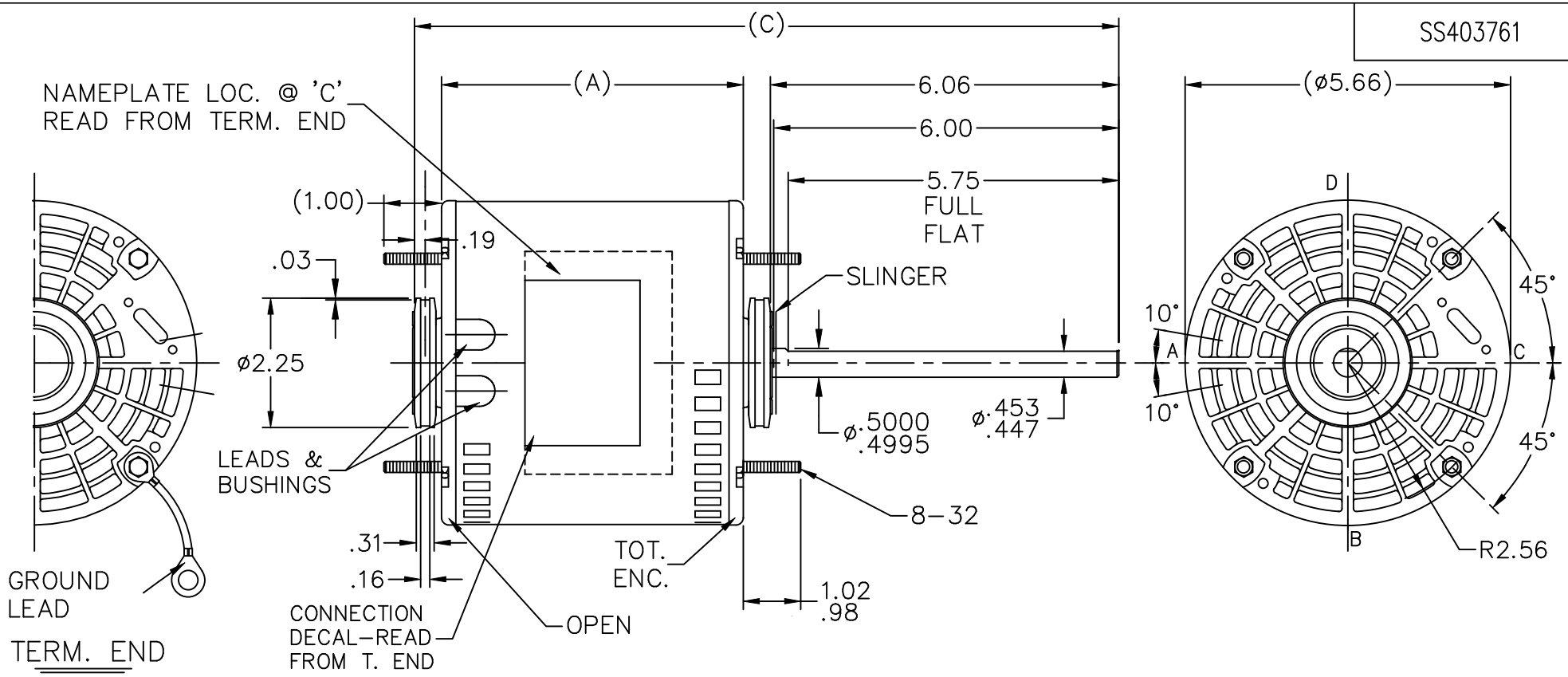

DASH	FR.	C	A
425	48Y	11.75	4.75

LEAD DESCRIPTION:

1 WHITE, 1 BLACK, 1 BLUE, & 1 RED, LEAD WITH .50 BARE WIRE STRIP. 30.00" LONG

2 BROWN LEADS WITH .25 FLAG-TYPE QUICK CONNECTS 30.00" LONG. BROWN/ WHITE MARKED LEAD IS COMMON TO WHITE.

REVERSING LEADS ARE MOLDED INTO MATING PULL-APART PLUGS. 1 YELLOW & 1 PURPLE LEAD PER PLUG. 5.00" LONG.

GREEN GROUND LEAD WITH TERM. FOR #10 SCREW 12.00" LONG.

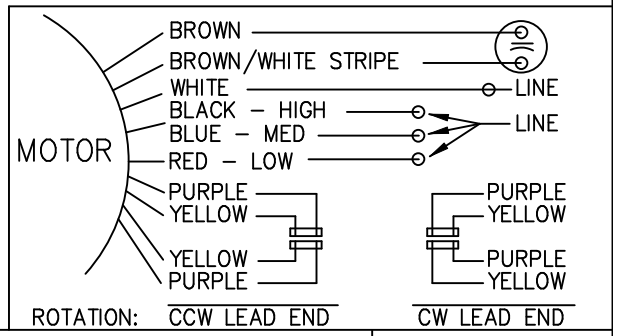

NO.	REVISION	BY & DATE	CHK

TOLERANCES UNLESS SPECIFIED

DEC.	INCHES
.X	±.1
.XX	±.03
.XXX	±.005
.XXXX	±.0005
ANG	±7'30"

MARATHON ELECTRIC

TITLE OUTLINE

MAT'L.

FINISH

CAD FILE SS403761

RFP

DIST WP

DRAWN	RP 08-20-2008
CHK	SP 08-20-2008
APPD	NB 08-20-2008
SCALE	3=8
REF	SS73971
FMF	08-0421
PREV	

SIZE A | DRAWING NO. SS403761 | PAGE OF | REV.

6/26/2009 9:58:09 AM