SS620571

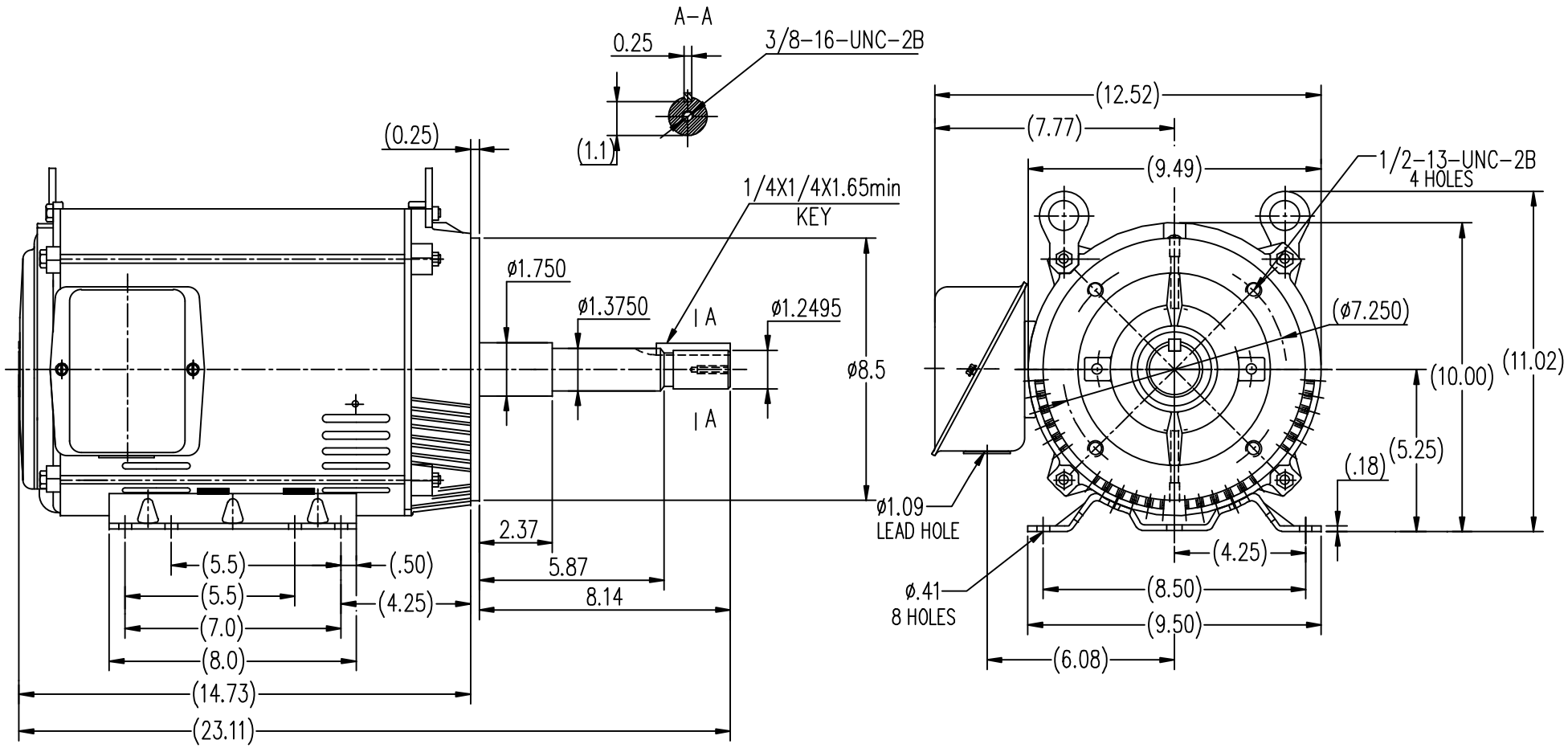

NO.	REVISION	BY & DATE	CHK

TOLERANCES UNLESS SPECIFIED

DEC.	INCHES
.X	±.1
.XX	±.03
.XXX	±.005
.XXXX	±.0005
ANG	±1/2

REGAL-BELOIT CORPORATION

TITLE: OUTLINE
ODP–213/215JP FR–ROLLED STEEL

MAT'L.

FINISH

CAD FILE: SS620571

RFP

DIST

SIZE: B

DRAWING NO.: SS620571

REV.

DRAWN Lee 05–16–2012
CHK HPH 05–16–2012
APPD JGX 05–16–2012
SCALE 1=5
REF
FMF HWADA
PREV