Uncontrolled Copy

SS404060

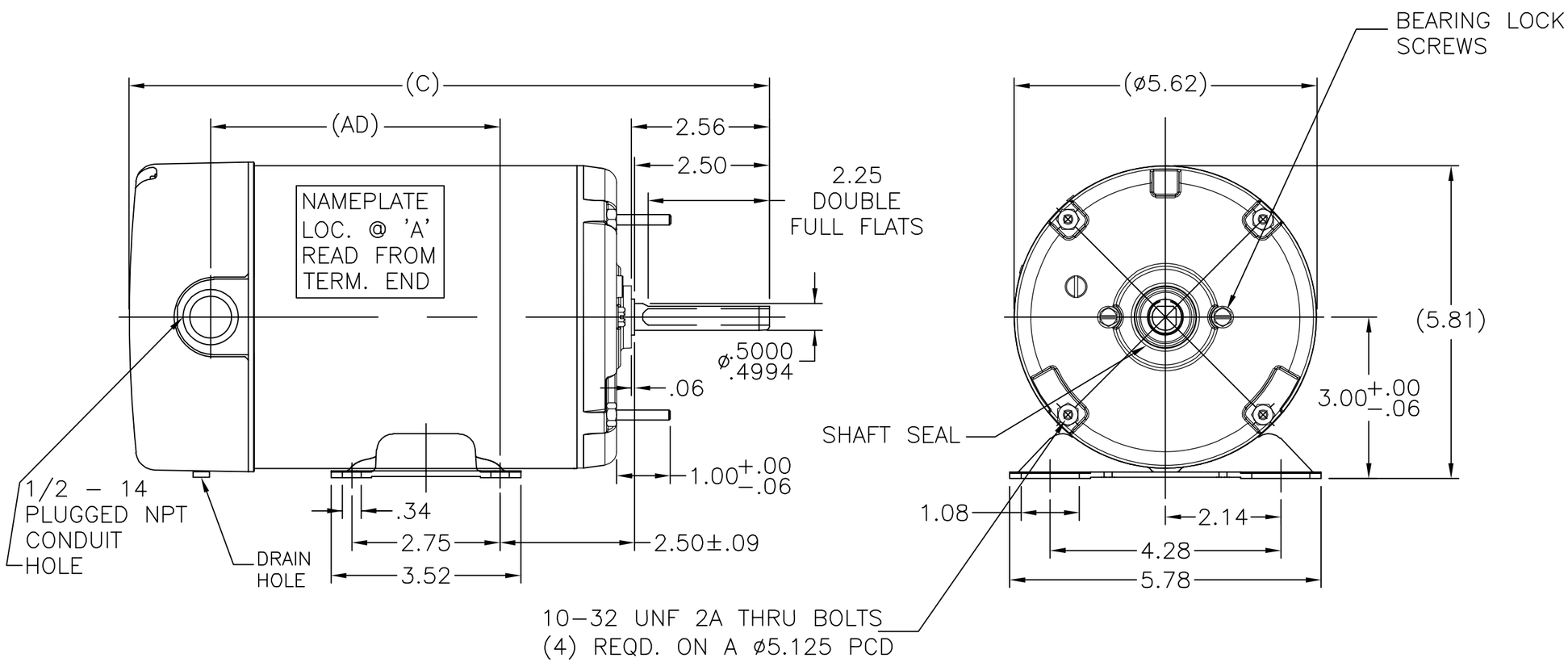

DASH NO.	"C"	"AD"
475	10.64	4.12
500	10.89	4.37
525	11.14	4.62
550	11.39	4.87
600	11.89	5.37

NO.	REVISION	BY & DATE
A	UPDATED NAMEPLATE LOCATION PER ECO–0062305	PST 12/5/14

TOLERANCES UNLESS SPECIFIED	
DEC.	INCHES
.X	±.1
.XX	±.03
.XXX	±.005
.XXXX	±.0005
ANG	±7'30"

PI
CHK

LEESON — ELECTRIC MOTORS GEARMOTORS AND DRIVES

TITLE OUTLINE – PSC – TENV ENCLOSURE 48Z–TWO COMP.–RIGID

MAT'L.
FINISH
CAD FILE SS404060
RFP
DIST WP

DRAWN	KR 02/05/2014
CHK	VS 02/05/2014
APPD	
SCALE	1:1
REF	OLPR132173
FMF	A099899.00
PREV	

SIZE	DRAWING NO. PAGE OF	REV.
A	SS404060	A

THIS DRAWING IN DESIGN AND DETAIL IS OUR PROPERTY AND MUST NOT BE USED EXCEPT IN CONNECTION WITH OUR WORK ALL RIGHTS OF DESIGN AND INVENTION ARE RESERVED
THIS IS AN ELECTRONICALLY GENERATED DOCUMENT – DO NOT SCALE THIS PRINT