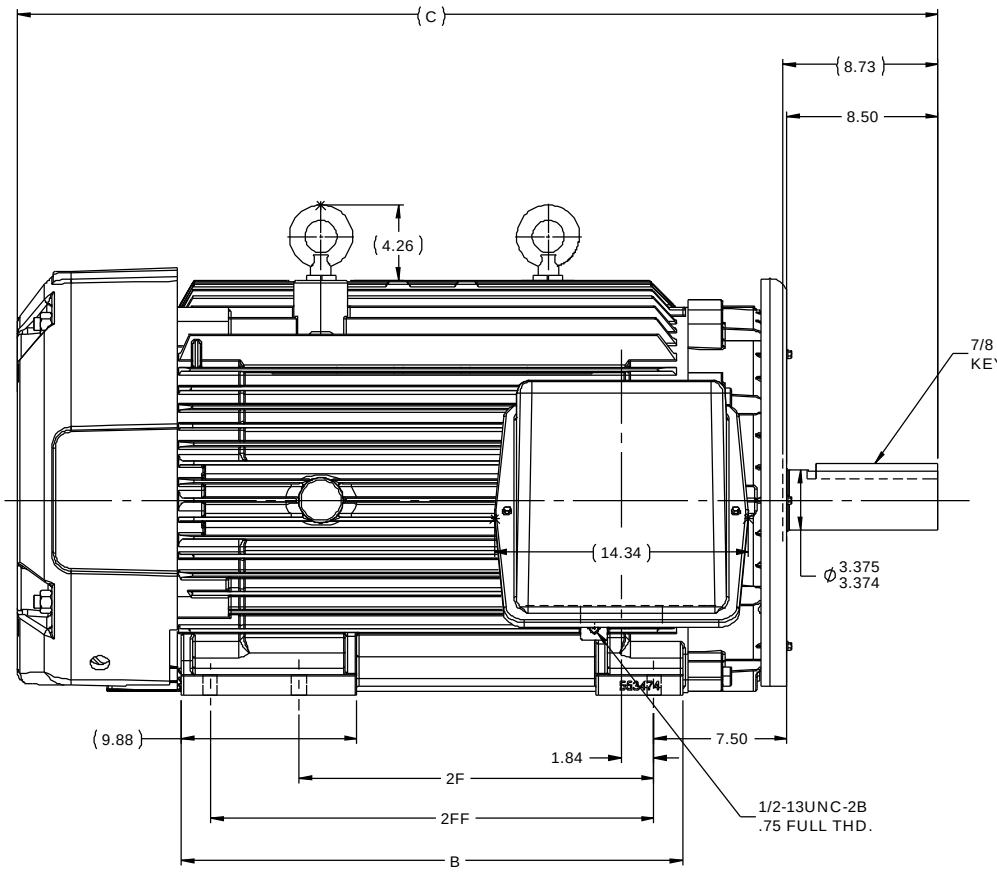

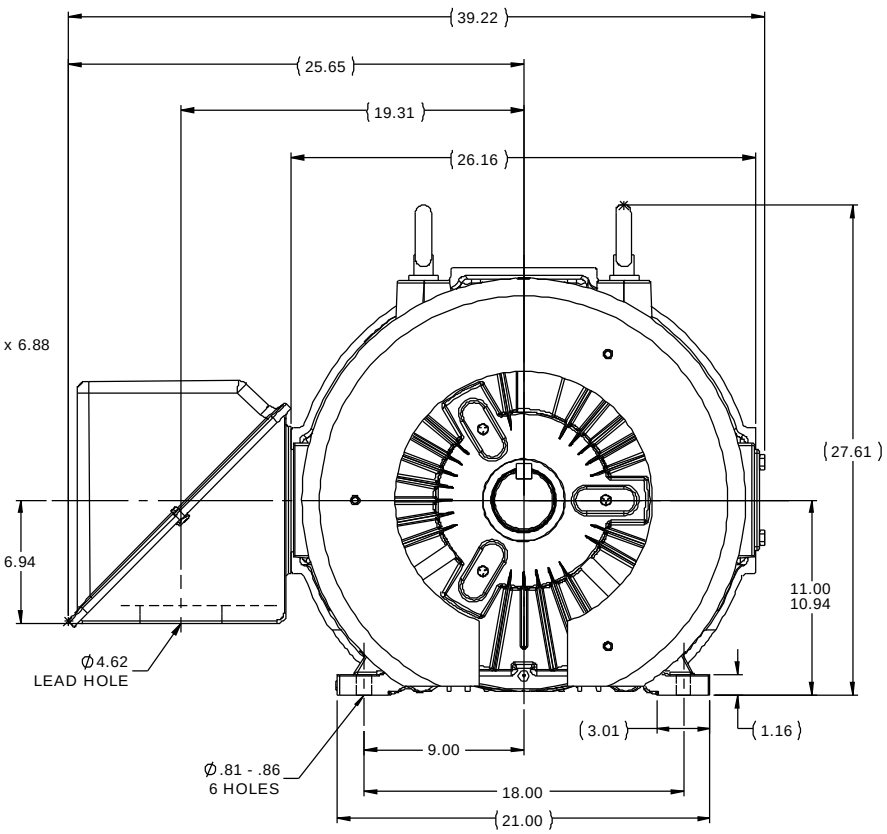

NOTES:
1. C. BOX CAN BE ROTATED IN 90° STEPS.
2. NAMEPLATES TO BE READ FROM CONDUIT BOX SIDE OF MOTOR.

DASH	FRAME	B	C	2F	2FF	
2875	447T	28.25	51.85	20.00	- - -	
2875	449T	28.25	51.85	- - -	25.00	

NO	REVISION	BY & DATE	CHK
5	UPDATED MU110616	HV 10-30-2012	MH
4	UPDATED FAN GUARD	RJW 04-30-2008	ML
3	UPDATED DRAWING	RJW 04-19-2007	
2	2F WAS 22.00, BS WAS 1.78 CN 36705	HLB 0616-2003	HLB
1	NEW DRAWING CN 36705	HLB 05-30-2003	JHL

TOLERANCES UNLESS SPECIFIED

DEC	INCHES
.X	±.1
.XX	±.03
.XXX	±.005
.XXXX	±.0005
ANG	±7'30"

marathon electric

TITLE OUTLINE - TEFC
447/9T FR. - FLAT BRACKET - W/BAFFLE

MAT'L
FINISH

DRAWN	HLB 05-27-2003
CHK	JHL 05-30-2003
APPR	JES 05-30-2003
SCALE	1:7
REF	B-SS517520
FMF	
PAGE	OF

THIRD ANGLE PROJECTION

RFP
PREV
NETWORK FILE NAME SS519824

SIZE B
DRAWING NO SS519824
REV 5

10/31/2012 2:08:24 PM - Converted by Connexus