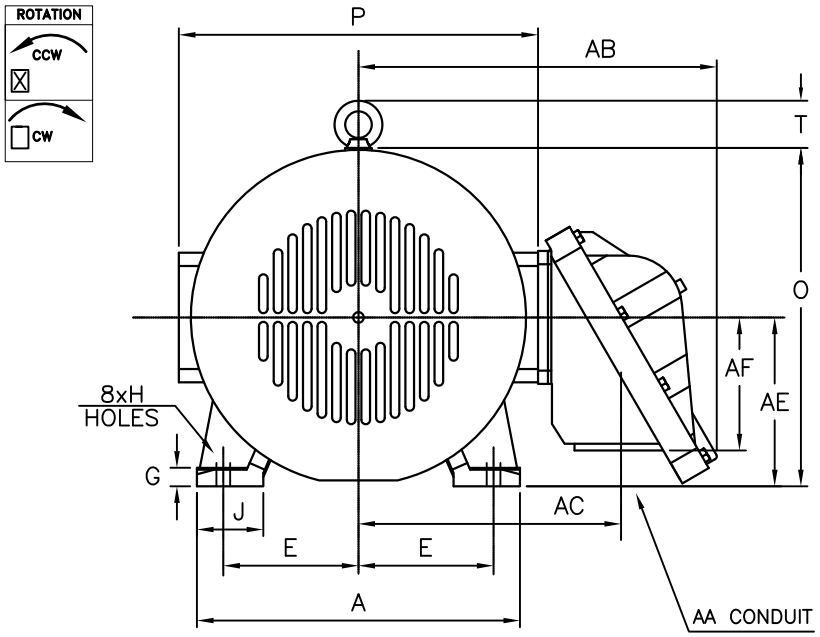

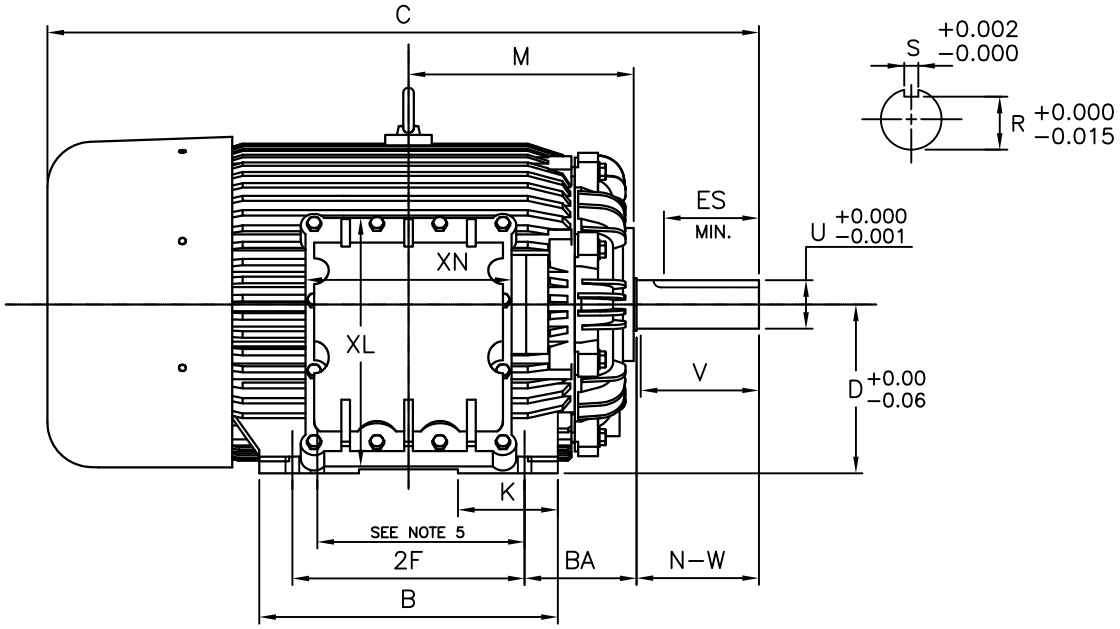

NOTES:
1. DIMENSION V REPRESENTS LENGTH OF STRAIGHT PART OF SHAFT
2. MAIN CONDUIT BOX MAY BE ROTATED IN 90° INCREMENTS
3. KEY DIMENSIONS EQUAL S x S x 5.62 FOR T AND S x S x 2.75 FOR TS (MOTOR SUPPLIED WITH KEY)
4. MOTOR WEIGHT SHOWN IS MAXIMUM HORSEPOWER IN FRAME
5. THIS DIMENSION EQUALS 2F FOR 404T/TS MOUNTING
6. STANDARD PRODUCT USE BI−DIRECTIONAL FAN. OPPOSITE ROTATION AVAILABLE ONLY BY CONNECTION CHANGE

UNITS: INCHES

FRAME SIZE	MOTOR DIMENSIONS											CONDUIT BOX						
	A	B	C	D	G	J	K	M	O	P	T	AA[NPT]	AB	AC	AE	AF	XL	XN
404TS/405TS	19.2	17.7	39.2	10.00	1.0	4.0	5.9	13.4	20.1	19.9	2.8	3.00	21.3	15.6	10.00	7.9	15.2	12.3
404T/405T	19.2	17.7	42.2	10.00	1.0	4.0	5.9	13.4	20.1	19.9	2.8	3.00	21.3	15.6	10.00	7.9	15.2	12.3

FRAME SIZE	MOUNTING				SHAFT EXTENSION			KEY SEAT			BEARINGS		MAXIMUM WEIGHT
	E	2F	H	BA	N−W	V	U	R	S	ES	LS	OS	
404TS/405TS	8.00	12.25/13.75	0.81	6.62	4.25	4.00	2.125	1.845	0.500	2.75	6313C3	6313C3	1380 lbs.
404T/405T	8.00	12.25/13.75	0.81	6.62	7.25	7.00	2.875	2.450	0.750	5.62	6317C3	6313C3	1380 lbs.

CUSTOMER: _____ MOTOR MODEL NO.: _____

P.O. NO.: _____ HP: _____ VOLTAGE: _____ RPM(SYN.): _____ Hz: _____

FRAME SIZE: _____ PRODUCT TYPE: TEFC EXPLOSION PROOF; CLASS I GROUP D; CLASS II GROUPS E, F, G

COMMENTS: _____

PER: _____ DATE: _____

TAG NO's.:

- [x] STANDARD (NO AUX. BOXES)
- [ ] RTD AUX. BOX
- [ ] SPACE HEATER AUX. BOX
- [ ] BEARING RTD's

TOSHIBA RESERVES THE RIGHT TO MAKE CHANGES OF TECHNICAL IMPROVEMENT AND THE DATA MAY CHANGE WITHOUT NOTICE

DO NOT USE FOR CONSTRUCTION, INSTALLATION, OR APPLICATION PURPOSES UNLESS THE DRAWING IS MARKED AS CERTIFIED

- [x] PRELIMINARY
- [ ] CERTIFIED

TOSHIBA

TOSHIBA INTERNATIONAL CORPORATION

TOTALLY−ENCLOSED FAN−COOLED
HORIZONTAL FOOT−MOUNTED
3 PHASE INDUCTION MOTOR
F1 ASSEMBLY

XT SERIES

VISIT OUR WEBSITE AT:
www.toshiba.com/ind

MDSL0041−08 R05