NEMA 56 Frame Three Phase Motors

ODP - Mechanical Data

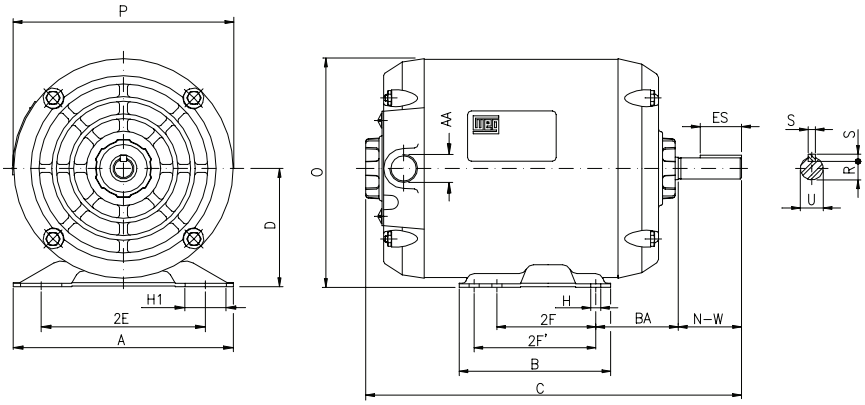

NEMA FRAMES	MOUNTING			A	B	C	D	O	P	XO	KEYWAY			SHAFT EXTENSION		BEARINGS	
	2E	2F	BA								S	R	ES	N-W	U	D.E.	N.D.E.
56	4.875	3.000	2.750	6.535	4.015	9.764	3.500	6.378	5.748	1.516	0.187	0.517	1.102	1.874	0.6250	6203-ZZ	6202-ZZ
C56						10.551											
A56						10.315		6.772	6.535							6204-ZZ	6203-ZZ
B56						11.102				1.516							
D56						12.283											
F56H		3.000 5.000*			6.496	13.464				1.300							

* NEMA 56H is provided with a double holed base - DIMENSION B: 3" AND 5".
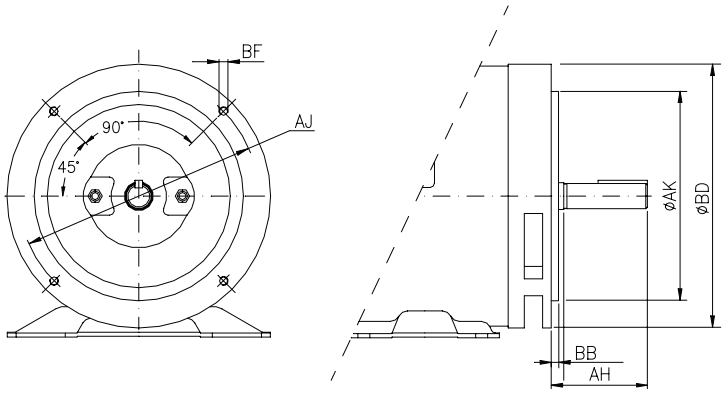
"C" FLANGE DIMENSIONS							
NEMA FRAMES	AJ	AK	BD	BF		BB	AH
				NUMBER	TAP SIZE		
56	5.874	4.500	6.496	4	UNC3/8"	0.157	2.063
C56							
A56							
B56							
D56							
F56H							
G56H