DATE February 18, 2004	OUTLINE DIMENSIONS	MOTOR TYPE: ASGAJP
CATALOG NO. DJP0036	3-PHASE INDUCTION MOTOR	FRAME NO. 213JP

Pole	HP	kW	Hz	VOLT	Syn. Speed r/min(rpm)
6	3	2.2	60	230/460	1200

Ins	Rating	Dimension in	Approx Weight	Bearings
F	CONT.	inches	142 lbs.	DE: 6209ZZC3 NDE: 6206ZZC3

Open Protected Drip-Proof Squirrel Cage Rotor.

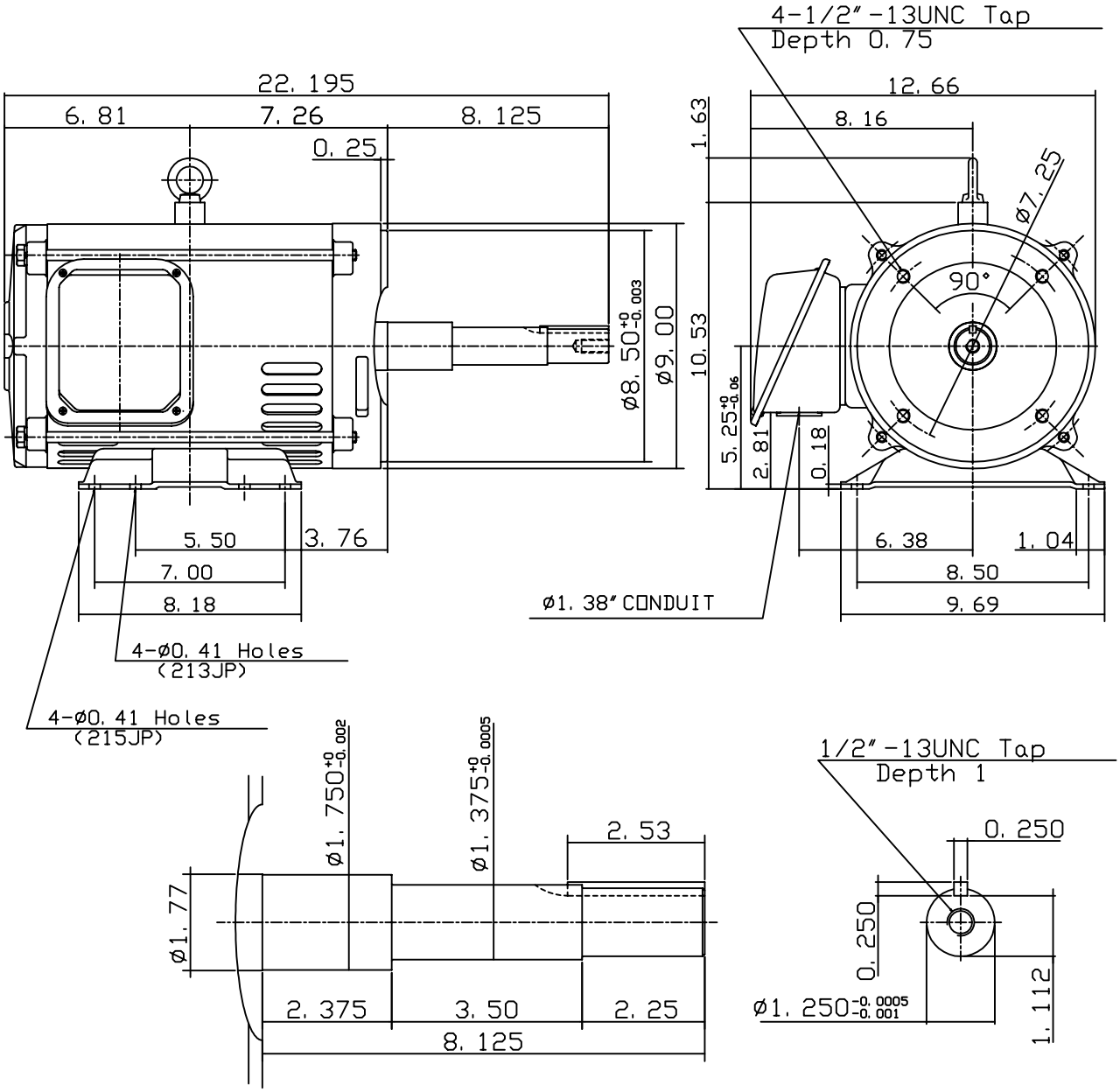

DWN.	J. T. HWANG	04·11·03	TECO Westinghouse	DWG NO.
CHKD.	J. S. JEAN	04·11·03		31049U526522
APPD.	Y. B. HUANG	04·11·03		