GE
Power Conversion

Product Information Packet

November 9, 2016

Data shown is for the current revision model #. Ensure your nameplate model # matches.

Model Number:	**5KS256STE105A**
Catalog Number:	**M7708**
Instruction Manual:	GEI-M1031
Connection Diagram:	GEM2034E-FIG210
Outline Drawing:	358B6272AB

Accessory Connection Diagrams

Bearing Thermocouple:	None	**Heater:**	None
RTD:	None	**Thermistor:**	None
Thermostat:	None	**Winding Thermocouple:**	None
Bearing RTD:	None		

Table of Contents

Specification	01
Performance Characteristics	02
Outline Drawing	03
Connection Drawing(s)	04

imagination at work

Marks:

MODEL NUMBER:	**5KS256STE105A**	**Estimated Weight:**	361 Lbs
Outline Drawing:	358B6272AB	**Time Rating:**	CONT
Connection Diagram:	GEM2034E-FIG210	**Enclosure:**	TEFC
Instruction Book:	GEI-M1031	**Encl Construction:**	SD
Design Code:	25AD0016A	**Ambient Max(°C):**	40
Type:	KS	**Alt Ambient Max(°C):**	--
Frame:	256T	**Insulation Class:**	F
Phases:	3	**NEMA Design:**	A
Poles:	2	**Nominal Efficiency:**	91.0 %
Output Power:	20HP 14.8KW	**Guaranteed Efficiency:**	89.5
RPM:	3520	**3/4 Load Efficiency:**	91.0
Voltage:	230/460	**KVA Code:**	G
Hertz:	60	**Max KVAR:**	3.6
Amps - FL:	44.4/22.2	**Power Factor:**	92.5
Service Factor:	1.15	**Bearing - DE:**	6310ZZ
Alt Service Factor:	--	**Bearing - ODE:**	6208ZZ

Enclosure is Totally Enclosed Fan-Cooled

Stamped Nameplate Notes:
USABLE AT 200V @ 20 HP,50.8 AMPS @ 1.0 SF
LRA: 305.6/152.8
50HZ DATA: 15 HP,200/400V,44.2/22.1 AMPS @ 1.15 SF
50HZ DATA: 20 HP,200/400V,50.8/25.4 AMPS @ 1.00 SF
GREASE TYPE: SHELL ALVANIA R3 LITHIUM GREASE

Additional Information:

CONDUIT BOX MATERIAL: CAST IRON
SUITABLE FOR USE IN CLASS I DIVISION 2 LOCATIONS
CLASS I DIVISION 2 GROUPS A,B,C,D T3C
CLASS I ZONE 2 IIC T3C

Performance Characteristics 1st Winding 1st Connection **Design: 25AD0016A**

Marks:

LOAD %	125.0	115.0	100.0	75.0	50.0	25.0	0.0
% EFF	89.09	89.63	90.52	91	90.63	86.68	0.00
% PF	93.06	93.05	92.79	91.32	86.83	71.33	12.23
AMPS	28.22	25.81	22.29	16.89	11.89	7.57	5.05

TORQ(FL)#FT	29.84	**TORQ(LR)%FL**	229.5	**TORQ(BD)%FL**	265.98
AMPS(LR)	152.76	**PF AT START**	0.36		

This motor is capable of two cold or one hot start with a maximum connected load inertia of 85 Lb-Ft Sq (3.58 Kg-meter Sq)at 100% voltage, where the load torque varies with the square of the speed. Acceleration time with maximum inertia and the above load type is 24 seconds. Safe stall time at 100% voltage is 47 seconds cold, 28 seconds hot. Rotor inertia is 1.27 Lb-Ft Sq (0.05 Kg-meter Sq).

Open Circuit A-C:	0.534	**Short Circuit D-C:**	0.013
Short Circuit A-C:	0.015	**X/R Ratio:**	4.931
Stator Slots:	36	**Rotor Slots:**	44

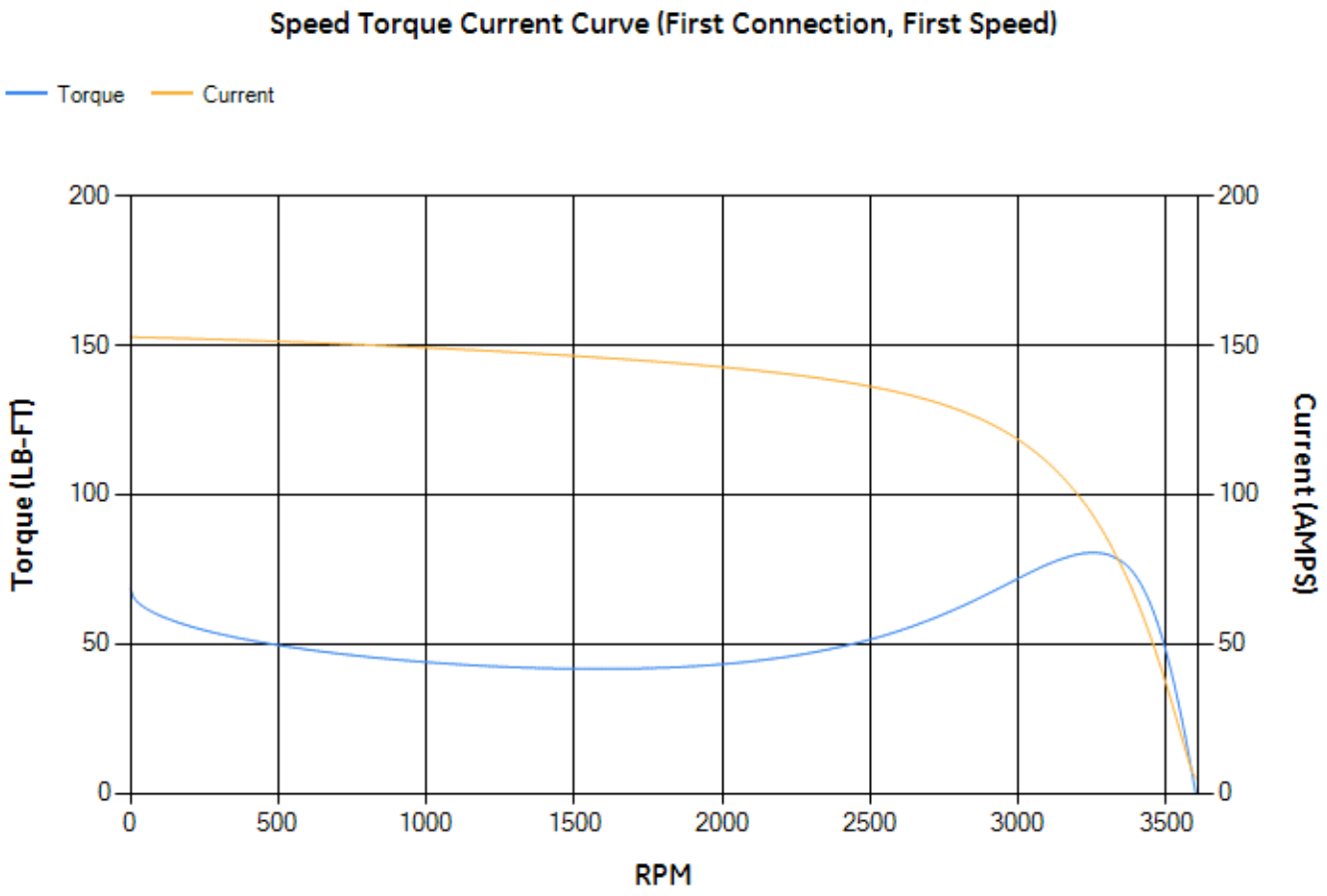

Marks:

Model Number: 5KS256STE105A | **November 9, 2016**

NAME:501291659 OBJECT:358B6272AB DATE:05-Dec-07 10:17:42

SIZE	DRAWING NO.	REV	SHEET
C	358B6272AB	0	1

REVISIONS

REV.	DESCRIPTION	DATE	APPROVED

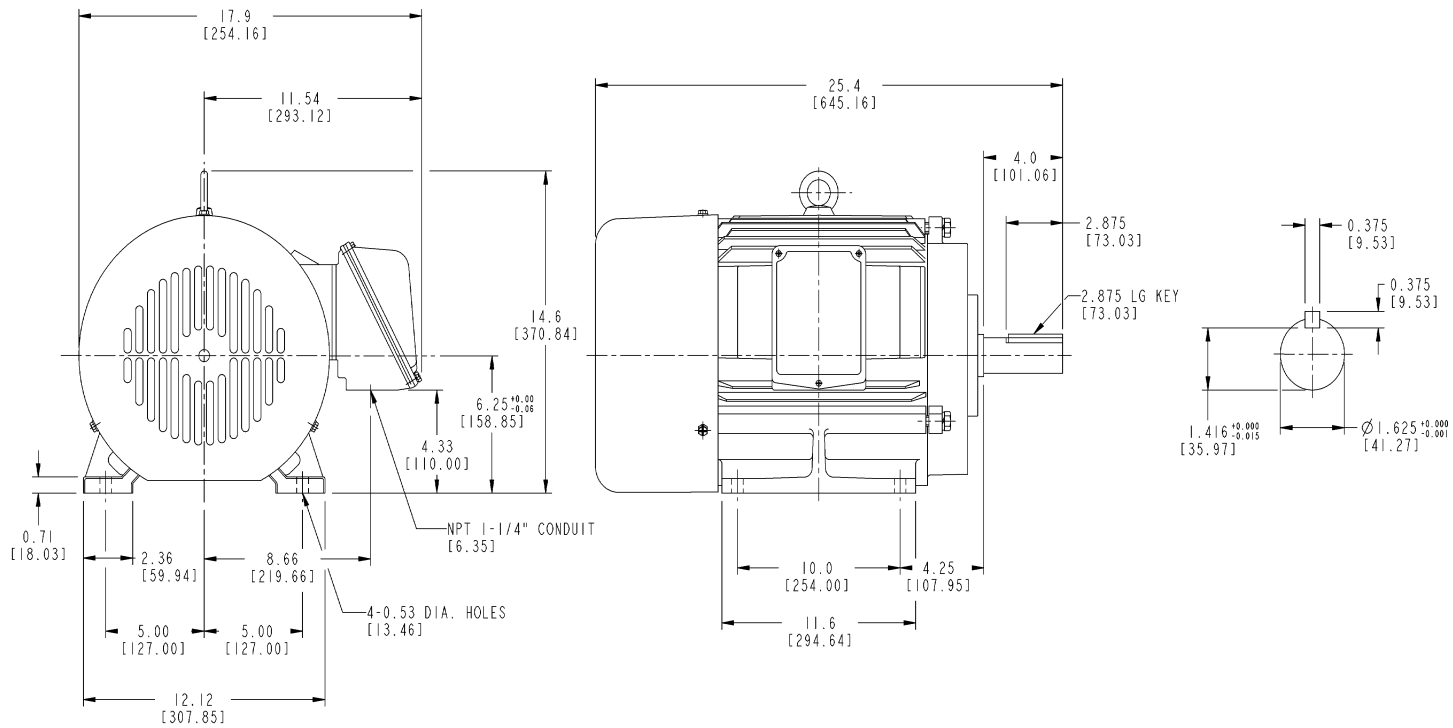

NOTES :

1. DIMENSIONS ARE IN INCHES.
2. F-1 ASM AS SHOWN.
3. F-2 ASM - HAS CONDUIT BOX ON OPPOSITE SIDE.
4. BRACKETED DIMENSIONS ARE METRIC (MILLIMETERS)
5. IC411, IP54, IMB34 APPLY

THIRD ANGLE PROJECTION

Part must conform to SI 900000 Sect. 4, Toxicity Procedure

FOR ADDITIONAL INFO REFER TO:	SIGNATURES		DATE
APPLIED PRACTICES	MODEL		
UNLESS OTHERWISE SPECIFIED DIMENSIONS ARE IN INCHES	DETAIL	SOUMITRA	11/06/07
TOLERANCE ON:	CHECKED	SANJAY	11/06/07
1 PL DECIMALS ±	ENGRG	R.KOHNE	11/06/07
2 PL DECIMALS ±	MFG		
3 PL DECIMALS ±	QUALITY		
ANGLES ±	ISSUED	SOUMITRA	11/06/07
FRACTIONS ±			
FINISH ✓			
MATERIAL	SOLID MODEL: MODEL NAME		

GE Consumer & Industrial — GENERAL ELECTRIC COMPANY

TITLE

OUTLINE

FTD - 256T TEFC CE MARK

100.5 CU IN CONDUIT BOX

SIZE	DRAWING	REV
C	358B6272AB	0

SCALE: | SHEET 1 OF 1

Marks:

NAME:501452353 OBJECT:GEM2034E-FIG210 DATE:25-Feb-08 14:03:35

Connection Diagram

GEM2034E-FIG210

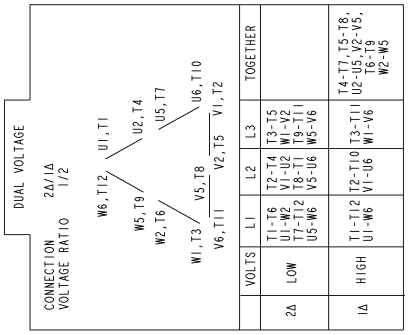

	VOLTS	L1	L2	L3	TOGETHER
2Δ	LOW	T1-T6 U1-W2 T7-T12 U5-W6	T2-T4 V1-U2 T8-T11 V5-U6	T3-T5 W1-V2 T9-T11 W5-V6	
1Δ	HIGH	T1-T12 U1-W6	T2-T10 V1-U6	T3-T11 W1-V6	T4-T7, T5-T8, U2-U5, V2-V5, T6-T9 W2-W5