THIRD ANGLE PROJECTION

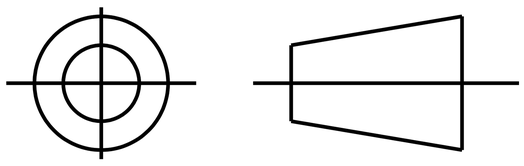

REVISIONS			
REV.	DESCRIPTION	DATE	APPROVED
15	CHD. PT#11 PER START CAP. CHD.	07/19/12	KARTHIK
16	REPRESENTED O/L IN SIDE VIEWS AND CHANGED PART #11 DIM'S PER SAMPLE DS12-3611	08/22/12	RAJESH

SHEET 1 | REV 16 | 52A107782 | SIZE A | DRAWING NO.

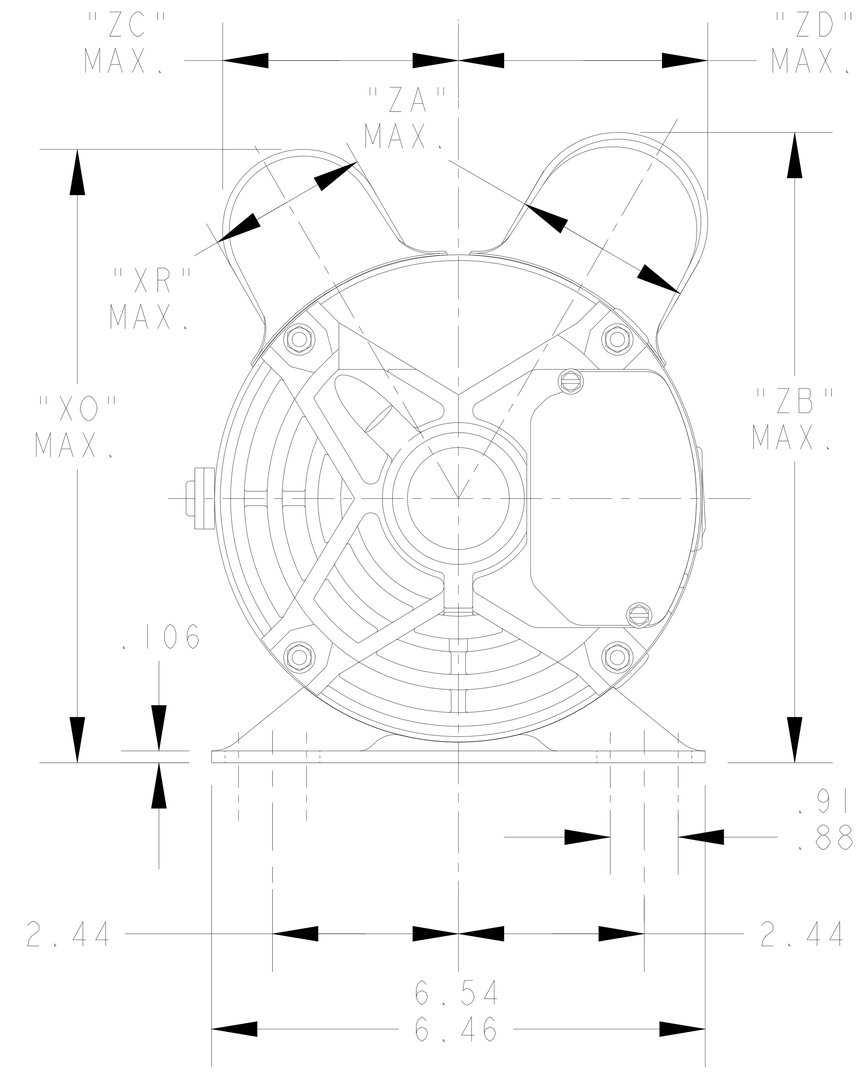

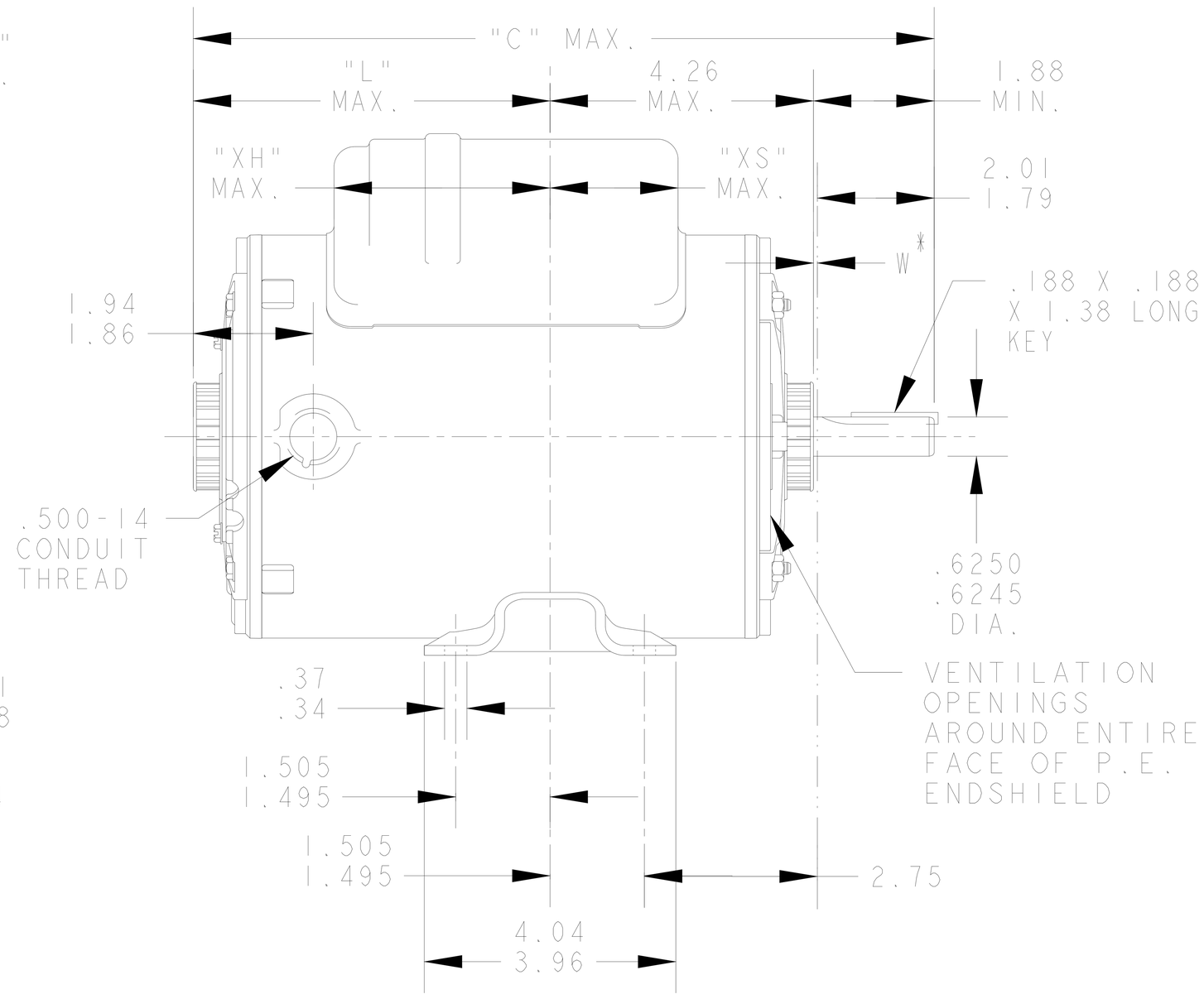

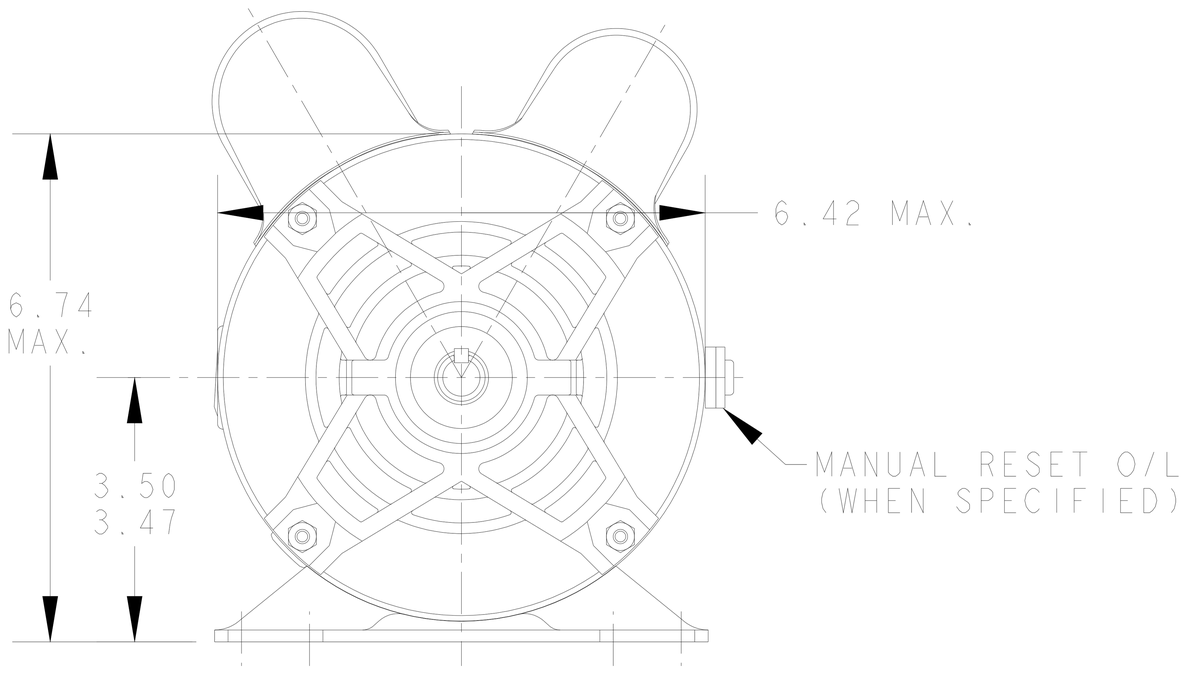

VIEW OF P.E. END SHIELD

*W IS A VARIABLE CLEARANCE DUE TO VARIATIONS IN PARTS AND ASSEMBLY

NOTE: PARTS ARE ADDED IN SHEET 2

SIGNATURES		DATE
MODEL	M.D.PAPE	03/02/92
DETAIL	.	.
CHECKED	.	.
ENGRG	.	.
MFG	.	.
QUALITY	.	.
ISSUED	M.D.PAPE	08/14/02
SOLID MODEL: 52A107782		

FOR ADDITIONAL INFO REFER TO:
APPLIED PRACTICES .
DIMENSIONS ARE IN INCHES
MATERIAL .

REGAL BELOIT

REGAL-BELOIT CORPORATION

TITLE

OUTLINE

GENERAL PURPOSE MOTOR - DRIP PROOF - BALL BEARING - WELD BASE

SIZE	DRAWING	REV
A	52A107782	16

SCALE: 0.003 | REF. No: . | SHEET 1 OF 2

SHEET 2 | REV 16 | 52A107782 | DRAWING NO. | SIZE A

THIRD ANGLE PROJECTION

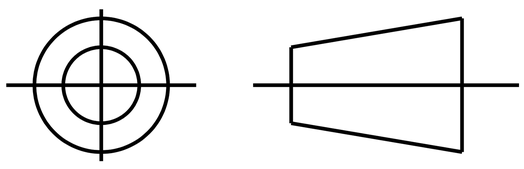

REVISIONS

REV.	DESCRIPTION	DATE	APPROVED
10	ADDED PART# 8&9 PER DS07-0570&0571	05/23/07	BOMMU
11	'XS' FOR PT#9 WAS 1.43	08/03/07	DURGA
12	CAP COVER CHG AS PER IS07-1231	09/21/07	BALA
13	ADDED PT# 10 PER SAMPLE DS09-1939	12/31/09	PRAVEEN.K
14	ADDED PT# 11 PER IS11 - 0065	01/07/11	KARTHIK
15	CHD. PT#11 PER START CAP. CHD.	07/19/12	KARTHIK
16	REPRESENTED O/L IN SIDE VIEWS AND CHANGED PART #11 DIM'S PER SAMPLE DS12-3611	08/22/12	RAJESH

P	TYPE	RBC SIZE	NEMA FR	"C"	"L"	"XH"	"XO"	"XR"	"XS"	"ZA"	"ZB"	"ZC"	"ZD"	MIN. SHELL
11	KCR	49	56	13.22	7.06	4.07	8.40	2.33	1.53	2.70	8.53	3.38	3.94	8.99
10	KCR	49	56	13.22	7.06	4.40	8.18	2.15	1.20	2.40	8.40	3.20	3.38	8.99
9	KCR	48	56	12.66	6.50	4.32	8.18	2.15	2.08	2.40	8.40	3.20	3.38	8.43
8	KCR	48	56	12.66	6.50	4.32	8.18	2.15	1.43	2.15	8.18	3.20	3.20	8.43
7	KCR	48	56	12.66	6.50	4.32	8.40	2.40	1.43	2.15	8.18	3.38	3.38	8.43
6	KCR	48	56	12.66	6.50	4.32	8.40	2.40	1.43	2.15	8.18	3.38	3.20	8.43
5	KCR	49	56	11.38	5.22	3.51	8.18	2.15	2.24	2.40	8.40	3.20	3.38	7.15
4	KC	49	56	11.38	5.22	3.41	8.18	2.15	2.21	2.40	8.40	3.20	3.38	7.15
3	KC	46	56	10.78	4.62	2.81	8.18	2.15	2.81	2.40	8.40	3.20	3.38	6.55
2	KCR/KC	49	56	11.38	5.22	3.51	8.18	2.15	2.24	2.40	8.40	3.20	3.38	7.15
1	KCR/KC	46	56	10.78	4.62	2.91	8.18	2.15	2.84	2.15	8.18	3.20	3.20	6.55

SIGNATURES		DATE
MODEL	M.D.PAPE	03/02/92
DETAIL	.	.
CHECKED	.	.
ENGRG	.	.
MFG	.	.
QUALITY	.	.
ISSUED	M.D.PAPE	08/14/02

SOLID MODEL: 52A107782

FOR ADDITIONAL INFO REFER TO:

APPLIED PRACTICES .

DIMENSIONS ARE IN INCHES ✓

MATERIAL .

REGAL BELOIT

REGAL-BELOIT CORPORATION

TITLE

OUTLINE

GENERAL PURPOSE MOTOR - DRIP PROOF - BALL BEARING - WELD BASE

SIZE A | DRAWING 52A107782 | REV 16

SCALE: 0.003 | REF. No: . | SHEET 2 OF 2