Uncontrolled Copy

607-0313

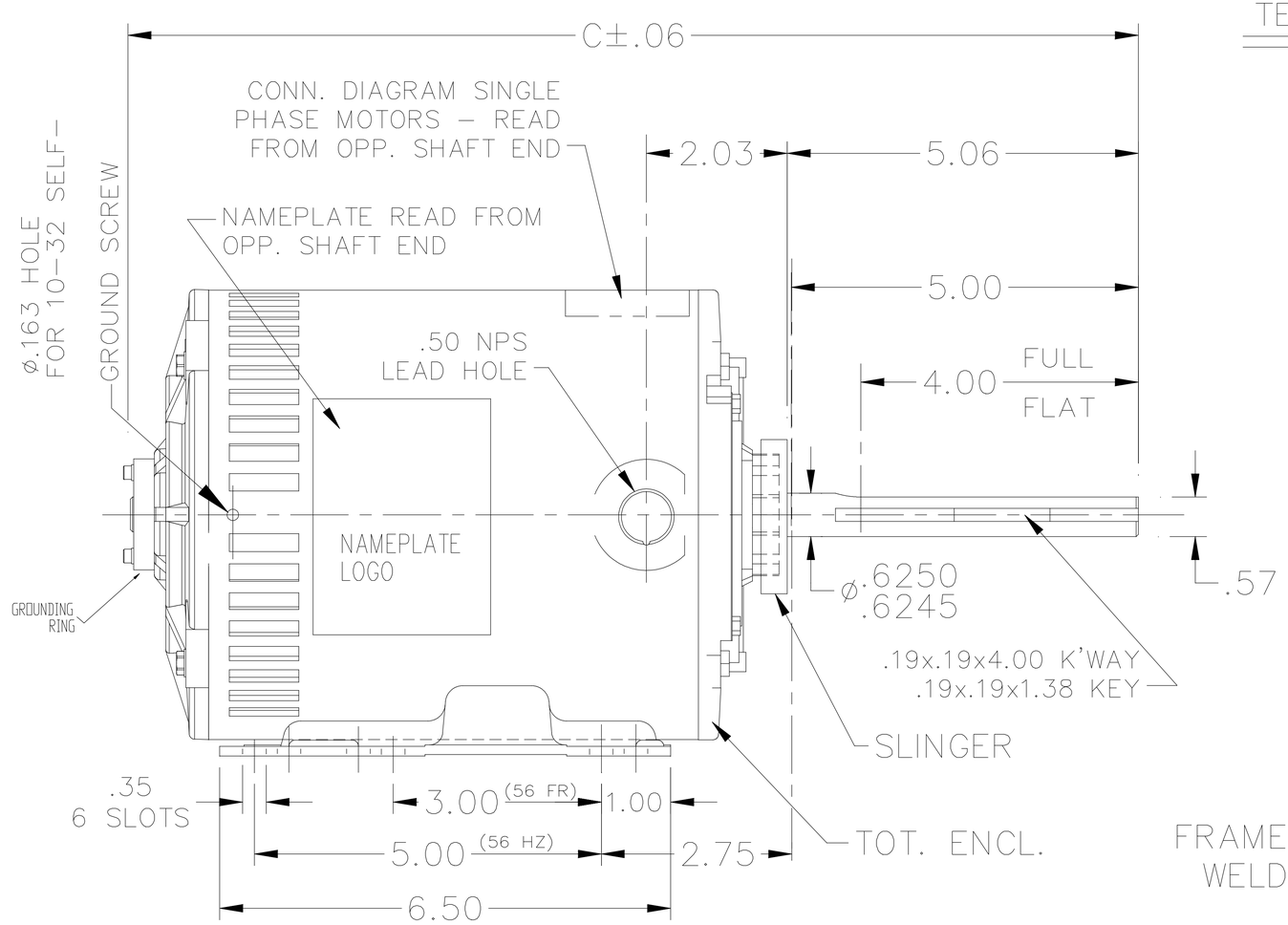

TERM. END

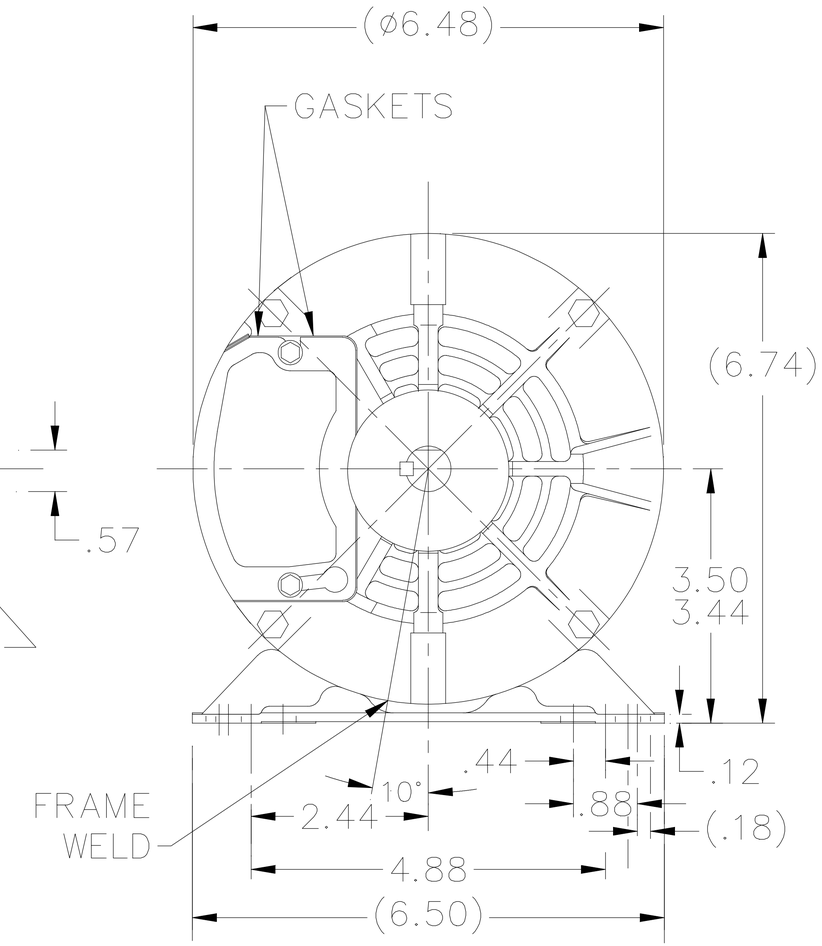

DASH	FR.	C			
956	56-95	17.06			

A. SPL DE: .625 x 5.00 IN SEK WITH 4.00 IN FULL FLAT

NO.	REVISION	BY & DATE	CHK

TOLERANCES UNLESS SPECIFIED	
DEC.	INCHES
.X	±.1
.XX	±.03
.XXX	±.005
.XXXX	±.0005
ANG	±7'30"

MARATHON ELECTRIC

TITLE OUTLINE

MAT'L.

FINISH

DRAWN	EL 8/18/2017
CHK	
APPD	
SCALE	3=8
REF	
FMF	
PREV	

THIS DRAWING IN DESIGN AND DETAIL IS OUR PROPERTY AND MUST NOT BE USED EXCEPT IN CONNECTION WITH OUR WORK ALL RIGHTS OF DESIGN AND INVENTION ARE RESERVED
THIS IS AN ELECTRONICALLY GENERATED DOCUMENT – DO NOT SCALE THIS PRINT

RFP

DIST

CAD FILE 607-0313

SIZE	DRAWING NO. PAGE OF	REV.
A	607-0313	