TYPE	OUTPUT		POLE	TIME RATING	VOLTAGE V	Hz	SYN.SPEED R.P.M
	HP.	kW.					
AEHH8N	150	111.9	6	CONT.	575	60	1200

TOTALLY ENCLOSED FAN-COOLED TYPE. SQUIRREL-CAGE ROTOR

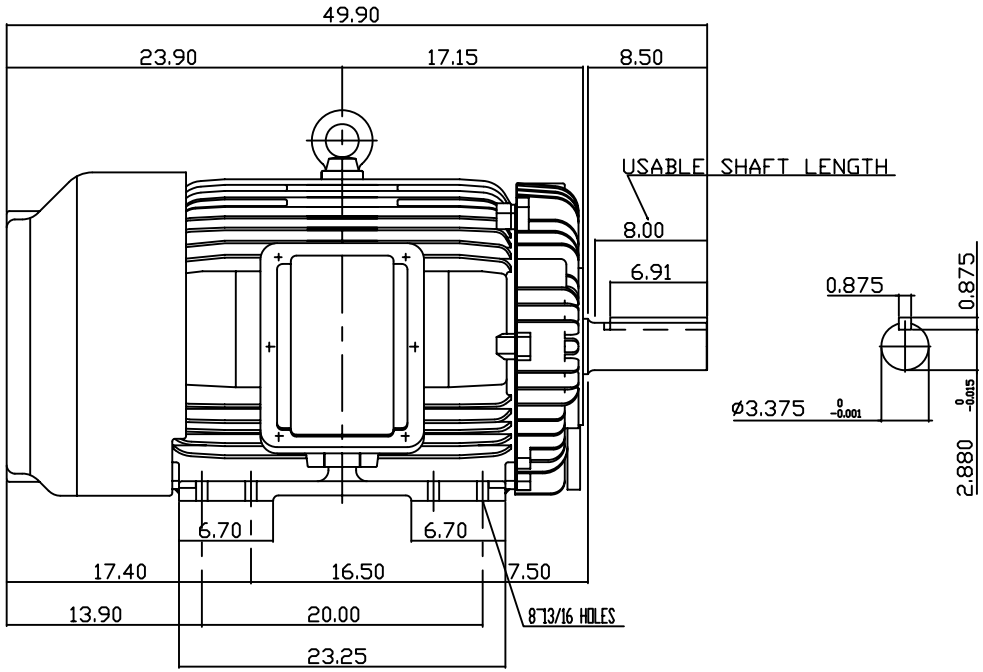

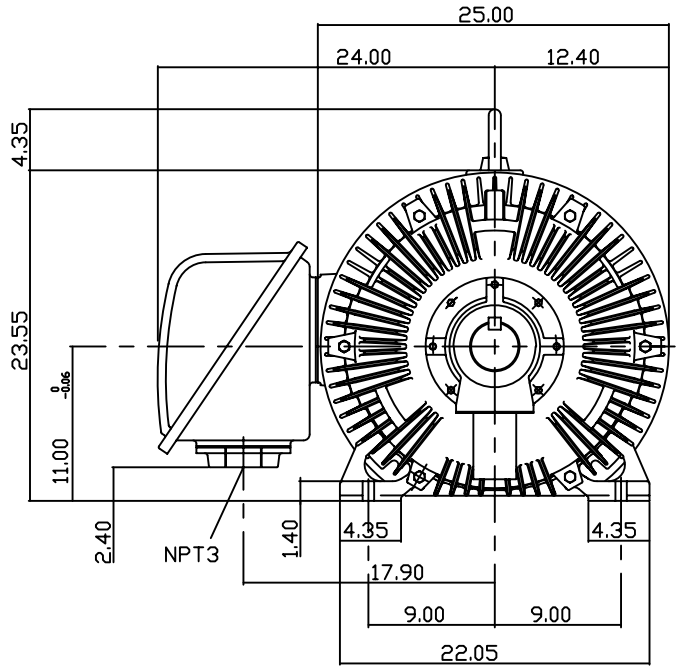

NOTE:

1. DIMENSIONS IN INCH
2. FRAME NO. 447T
3. F CLASS INSULATION, S.F.1.15
4. FOR DIRECT FLEXIBLE COUPLING
5. ENCLOSURE: IP54
6. BEARING SIZE: DRIVE END: 6320
   NON-DRIVE END: 6316
7. APPROX. WEIGHT: 2450 LBS

DWN.	N.QIN	JAN 13 2005
CHKD.	H.HUANG	JAN 13 2005
APPD.	C.WANG	JAN 13 2005

DATE 20050617

CATALOG #EP15065

OUTLINE DIMENSIONS

3-PHASE INDUCTION MOTOR

TECO Westinghouse

DWG NO. 3A040Y597 REV: 00

TW-56C