Uncontrolled Copy

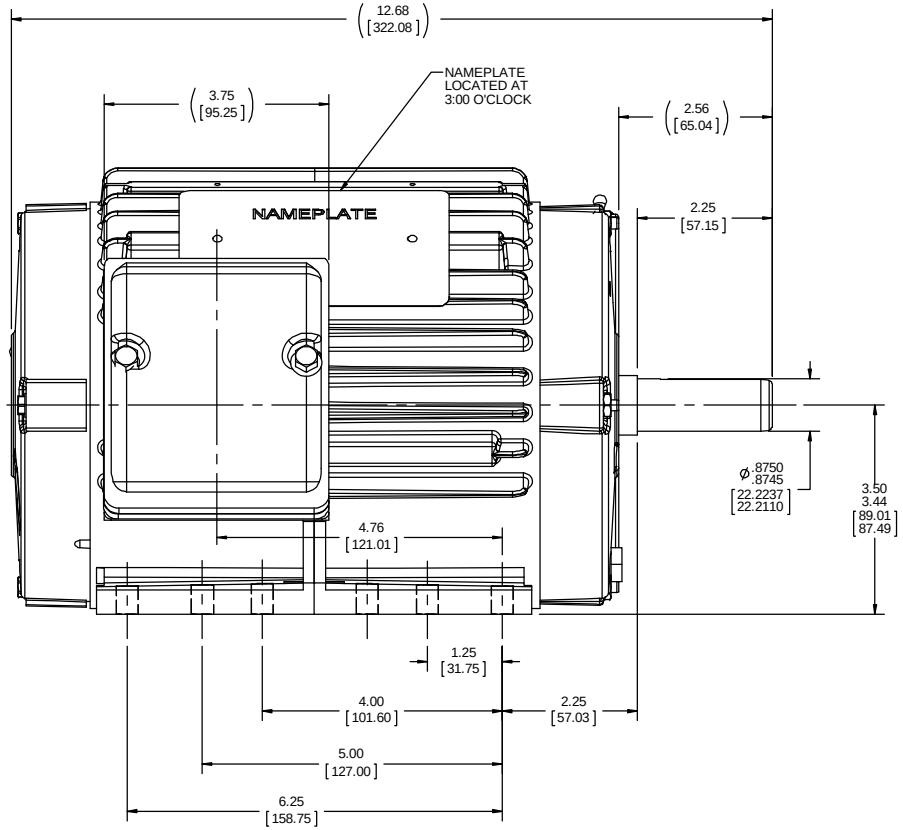

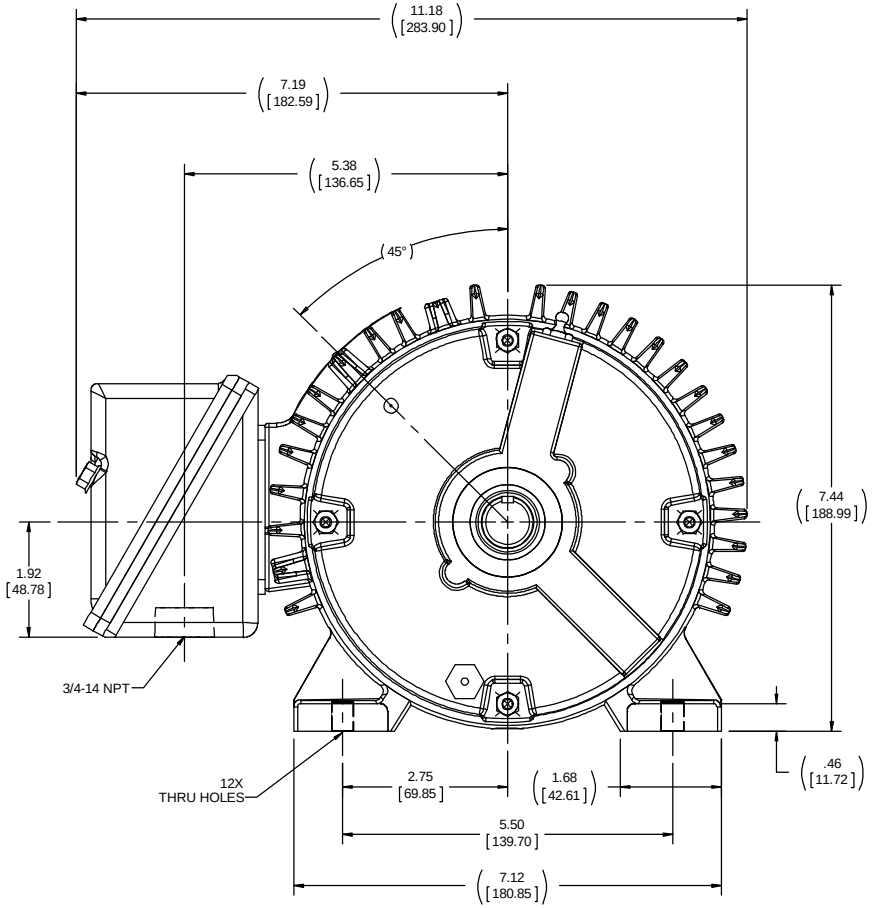

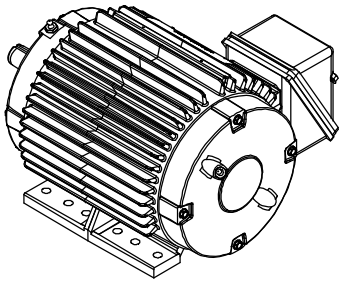

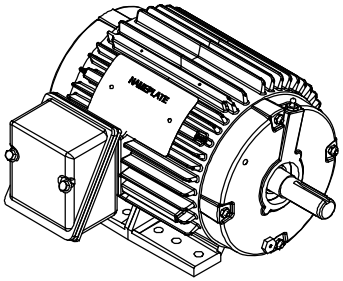

DRAWING REVISION A	REVISION BY M.ARGUELLES	DATE 11-29-2017
ECO ECO-0135557	APPROVED BY	DATE
ECO DESCRIPTION NEW MODEL RELEASE		

COPYRIGHT REGAL BELOIT AMERICA, INC. ALL RIGHTS RESERVED.
PROPRIETARY AND CONFIDENTIAL INFORMATION - THIS DOCUMENT IS THE PROPERTY OF REGAL BELOIT AMERICA, INC. ("OWNER") AND CONTAINS OWNER'S PROPRIETARY INFORMATION. ANY PERSON, CORPORATION OR OTHER FIRM RECEIVING IT IS DEEMED, BY RECEIVING IT, TO AGREE THAT IT, AND/OR ANY PART OF IT, SHALL NOT BE DISCLOSED TO ANY PERSON, CORPORATION OR OTHER ENTITY, DUPLICATED, AND/OR USED, EXCEPT AS EXPRESSLY APPROVED IN WRITING IN ADVANCE BY OWNER. THIS DOCUMENT SHALL BE RETURNED TO OWNER UPON REQUEST. IT MAY BE SUBJECT TO CERTAIN RESTRICTIONS UNDER APPLICABLE EXPORT CONTROL LAWS AND REGULATIONS.

TOLERANCES UNLESS OTHERWISE SPECIFIED:

DEC.	INCH	mm	ANGLE
.X	±0.1	[±2.5]	±0.5°
.XX	±0.02	[±0.51]	
.XXX	±0.005	[±0.127]	
.XXXX	±0.0005	[±0.0127]	

REMOVE BURRS & BREAK SHARP EDGES: .003/.015 [.076/.381] X 45°
CORNER FILLETS: R.02 [.51]
MACHINED SURFACES: 125/ INCH 3.2/ mm
mm SHOWN IN [BRACKETS]

DRAWN BY	M.ARGUELLES
DATE	11-29-2017
APPROVED BY	
DATE	
REFERENCE	
THIRD ANGLE PROJECTION	

Regal Beloit America, Inc.

DESCRIPTION
OUTLINE
140FR,TENV,RIGID,3-PHASE

MATERIAL | PROCESS/FINISH

SIZE C | DRAWING NUMBER OL56100292-001 | SHEET 1 OF1