100116

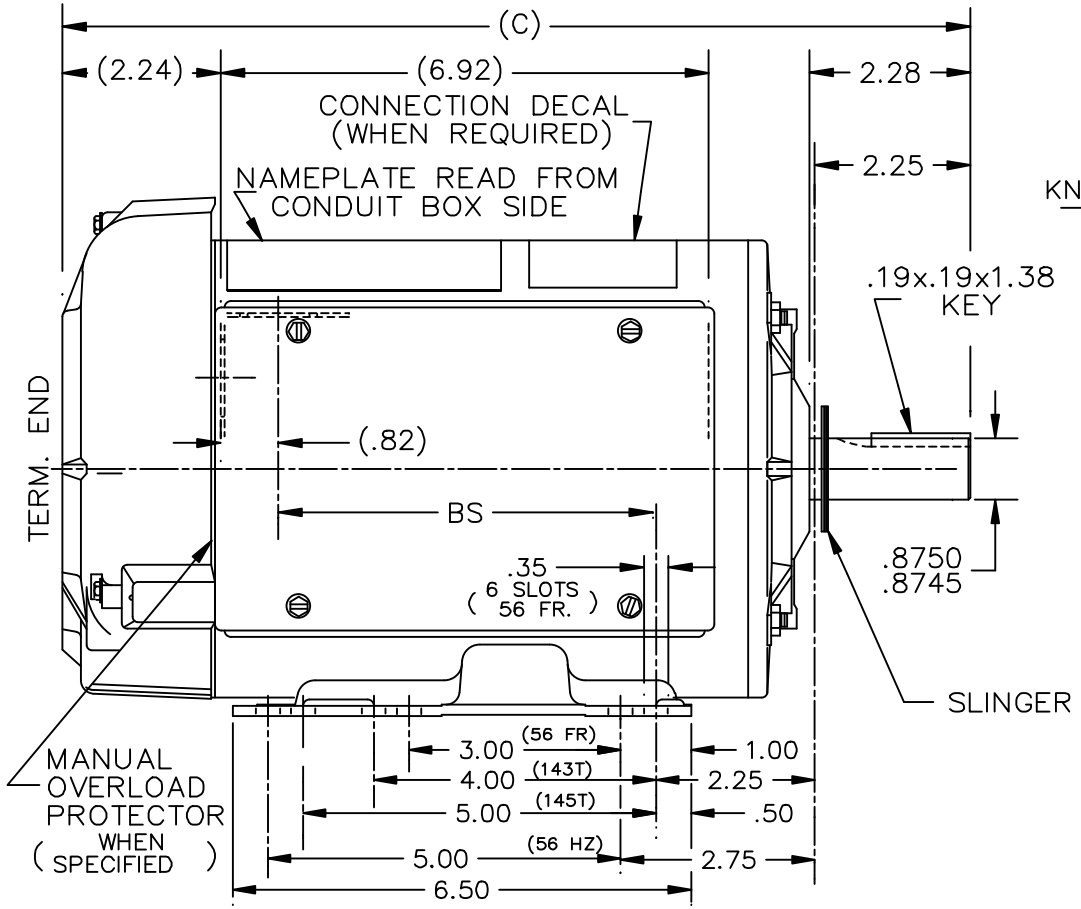

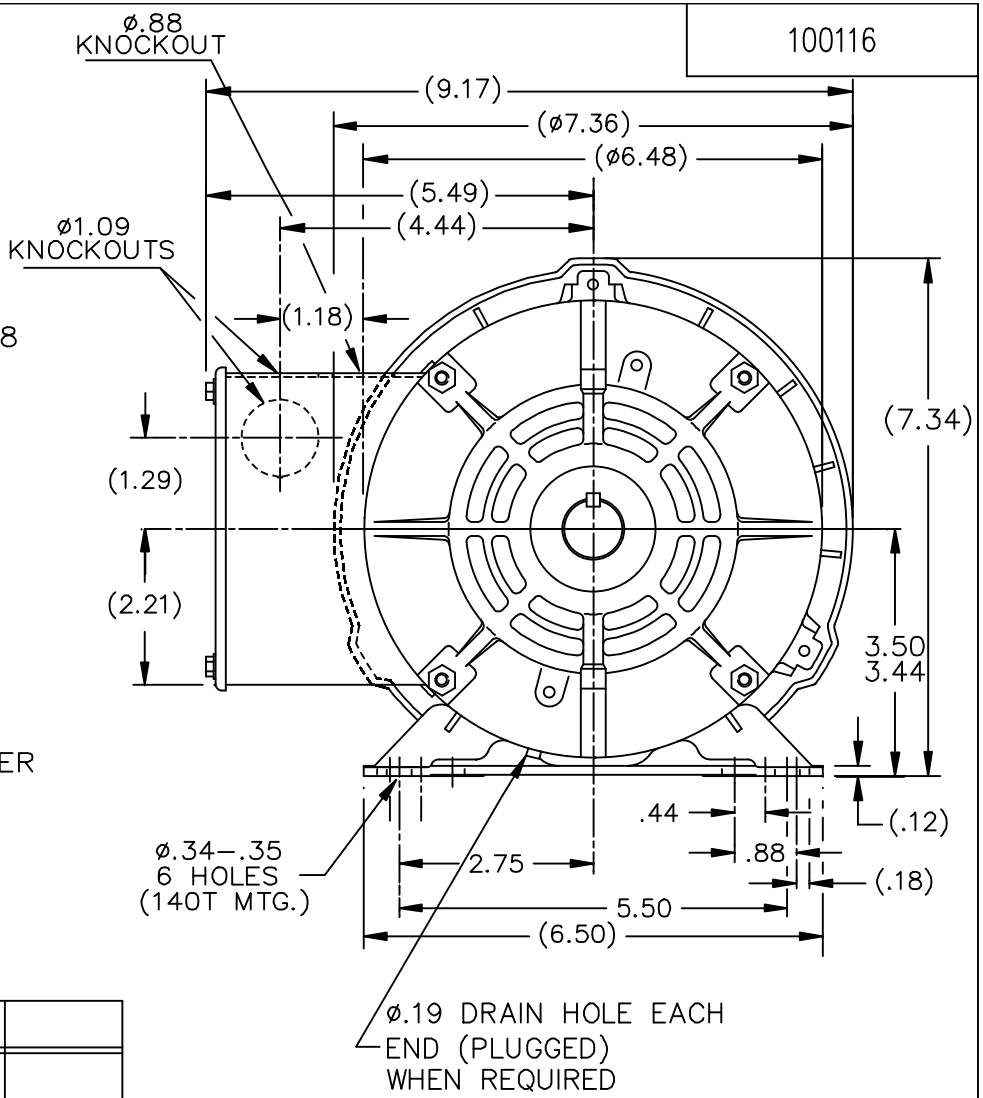

DASH	FR.	C	BS		DASH	FR.	C	BS	
					806	140T/56HZ	13.37	5.82	
					856	"	13.87	6.32	
					906	"	14.37	6.82	
756	140T/56HZ	12.87	5.32		956	"	14.87	7.32	

NO.	REVISION	BY & DATE	CHK
07	ADDED DRAIN HOLE NOTE PER ECN#24221	PN 4/26/2012	SVL
06	ADDED HEIGHT DIMENSION (7.34)	RJW 09-12-2005	ML
05	ADDED CONN DECAL CN13879	KJC 03-26-2003	ML
04	REDRAWN ON CADD	RM 08-12-1991	

TOLERANCES UNLESS SPECIFIED

DEC.	INCHES
.X	±.1
.XX	±.03
.XXX	±.005
.XXXX	±.0005
ANG	±7'30"

MARATHON ELECTRIC

TITLE OUTLINE
140 FR. 56 HZ – TEFC 1ø – BB

MAT'L.

FINISH

CAD FILE 100116

RFP

DIST WP

DRAWN	RM	08-12-1991
CHK	ML	08-12-1991
APPD	GK	08-12-1991
SCALE	1=2.75	
REF		
FMF		
PREV		

SIZE	DRAWING NO.	PAGE OF	REV.
A	100116		07