DATE APRIL 26, 2011	OUTLINE DIMENSIONS	MOTOR TYPE: AEHH8P-CF
CAT. #: NP0204C	3-PHASE INDUCTION MOTOR	FRAME NO. 256TC

Pole	HP	kW	Hz	VOLT	Syn.Speed r/min(rpm)
4	20	14.9	60	230/460	1800

Ins	Rating	Dimension in	Approx Weight	Bearings
F	CONT.	inch	334 lbs.	DE: 6309ZZ NDE: 6307ZZ

Totally Enclosed Fan Cooled Squirrel Cage Rotor.

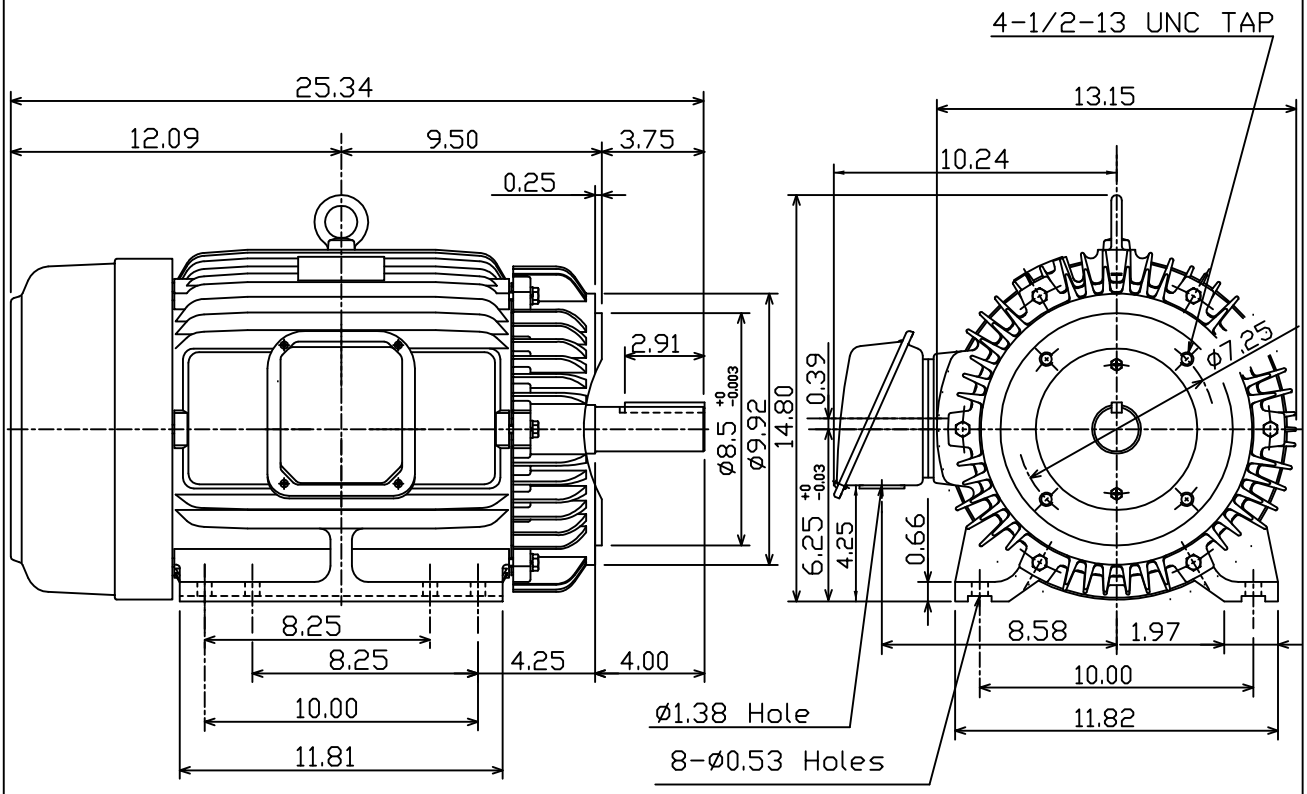

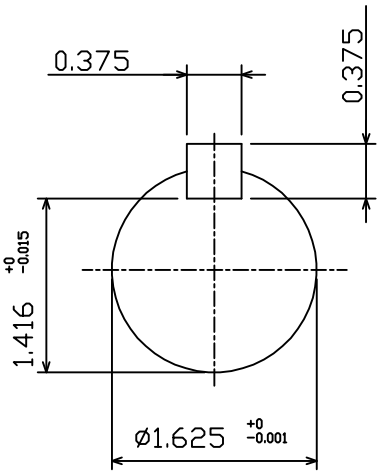

0				

DWN.	J.H.LIANG	04 -23 -11	TECO Westinghouse	DWG NO.
CHKD.	J.H.LIANG	04 -23 -11		31049J349220
APPD.	M.C.TSAI	04 -23 -11		