52A107191

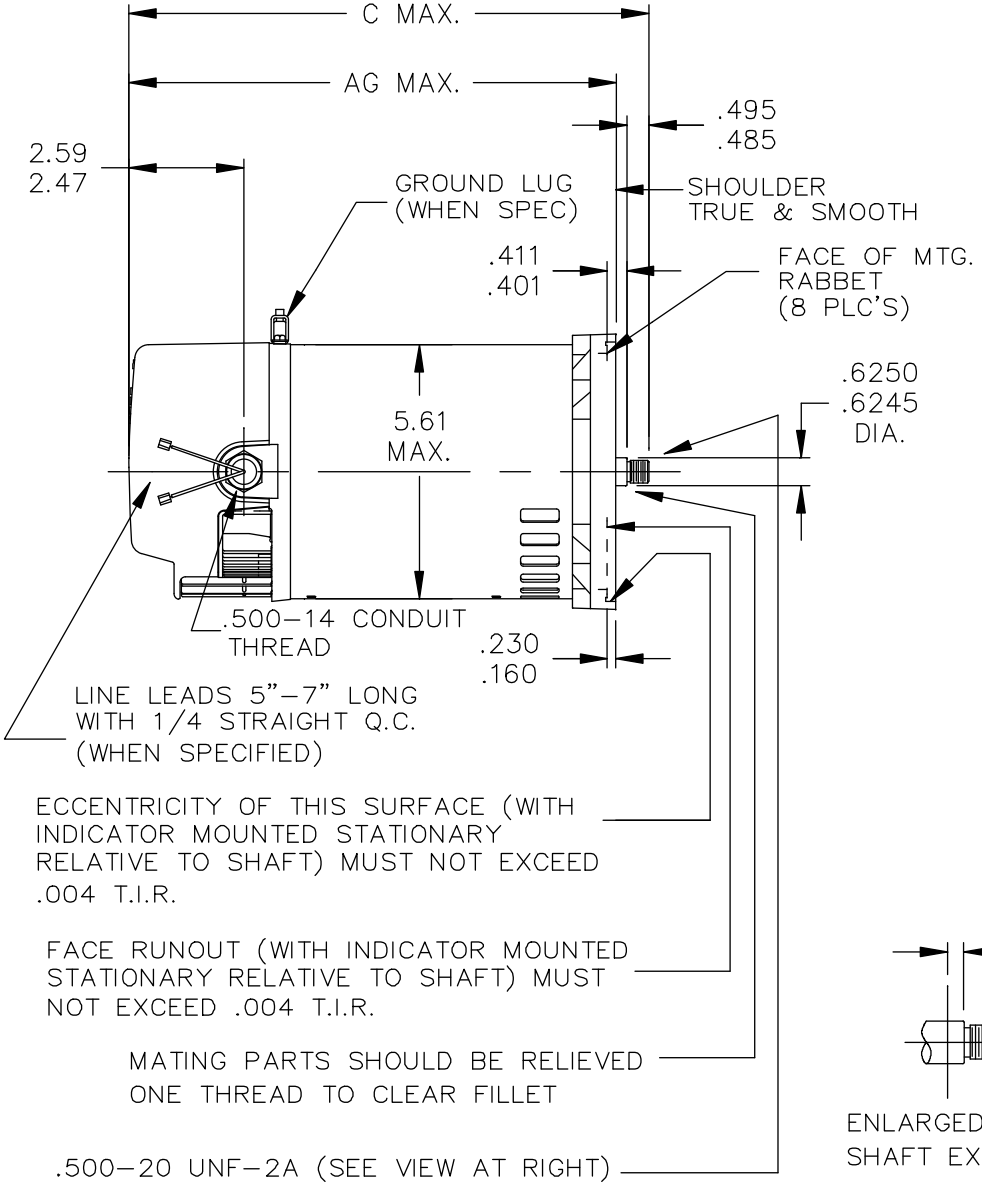

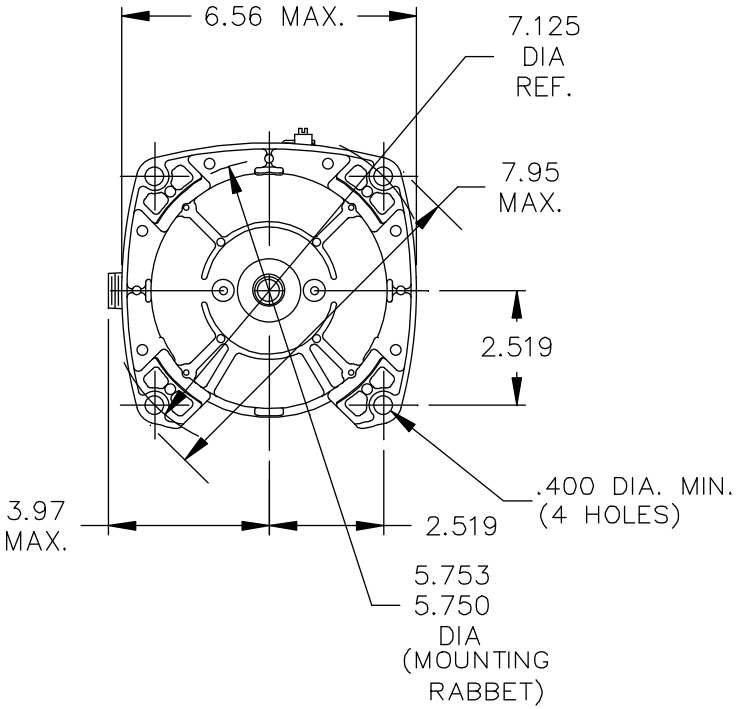

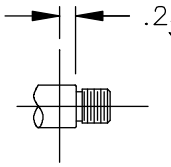

ECCENTRICITY OF SHAFT
AT THIS POINT NOT TO
EXCEED .002 T.I.R.

ENLARGED VIEW
SHAFT EXTENSION

P	TYPE	RBC SIZE	NEMA FR	C	AG	SHELL REF.
2	KC	38	56Z	12.59	11.86	7.22
1	KC	36	56Z	11.59	10.86	6.22

NO.	REVISION	BY & DATE	CHK
6	JET/POOL IS REPLACED BY JET PUMP PER ECO–0033464	PVR 05/15/13	DS
5	ADDED DIM 7.95 MAX. PER IS06–1166.	SUD 08/03/06	
4	CHG TO RBC FORMAT PER IS05–1777	SUD 02/22/06	
3	REVISED PER TI95–21,753.	MDP 04/27/95	
2	REV. PER (TI94–21348 & 348A)	MAM 09/28/94	

TOLERANCES UNLESS SPECIFIED

DEC.	INCHES
.X	±.1
.XX	±.03
.XXX	±.005
.XXXX	±.0005
ANG	±1/2°

REGAL BELOIT

REGAL-BELOIT CORPORATION

TITLE OUTLINE
2 COMPARTMENT UPGRADE – 56Z – JET PUMP

MAT'L.

FINISH

CAD FILE 52A107191

RFP

DIST

DRAWN BJS 09/09/91
CHK
APPD BLJ 09/09/91
SCALE 3=8
REF
FMF
PREV

SIZE A | DRAWING NO. 52A107191 | REV. 6