TYPE	OUTPUT		POLE	TIME RATING	VOLTAGE V	Hz	SYN.SPEED R.P.M
	HP.	kW.					
AEHGTK	150	112	4	CONT.	2300/4160	60	1800

TOTALLY ENCLOSED FAN-COOLED TYPE. SQUIRREL-CAGE ROTOR

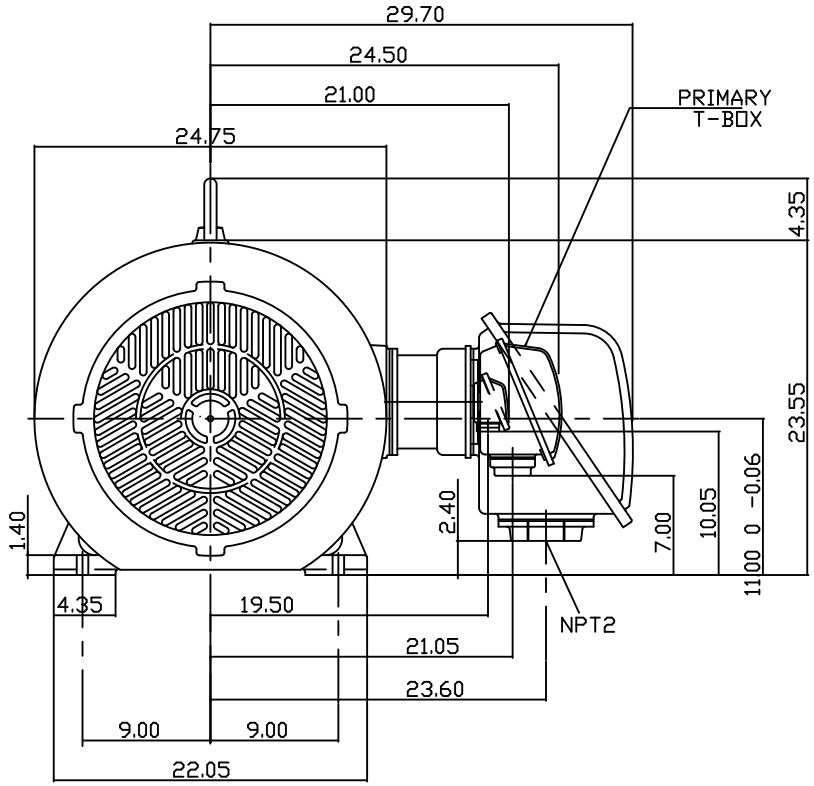

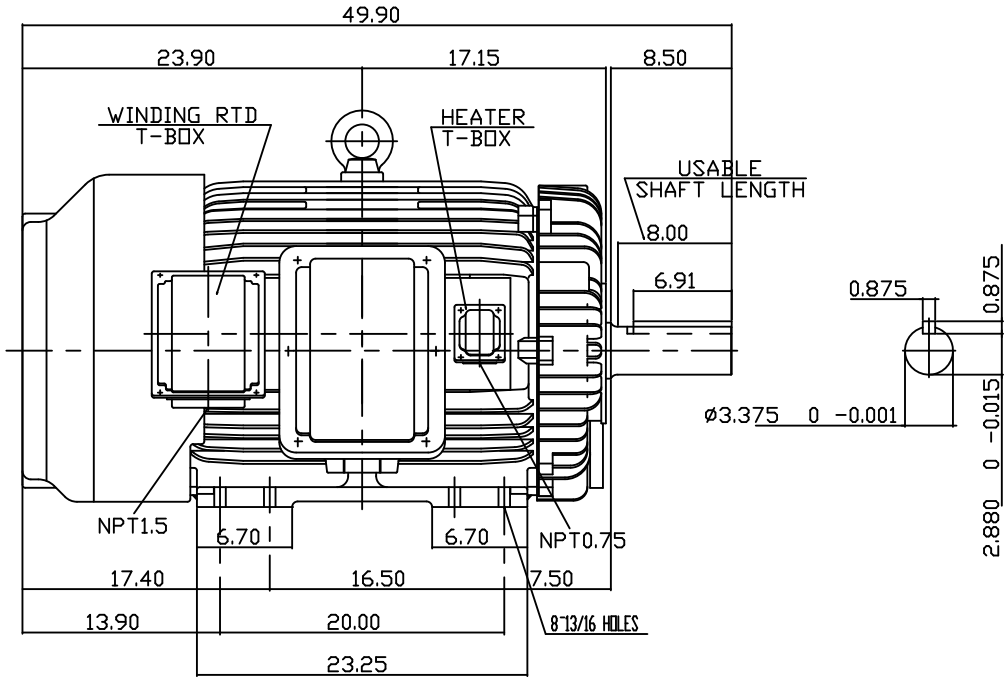

NOTE:

1. DIMENSIONS IN INCH
2. FRAME NO. 447T
3. F CLASS INSULATION, S.F.1.15
4. FOR DIRECT FLEXIBLE COUPLING
5. WITH WINDING RTD & SPACE HEATER
6. ENCLOSURE: IP54
7. BEARING SIZE DRIVE END: 6320
   NON-DRIVE END: 6316
8. APPROX. WEIGHT: 2070 LBS

TW-56C

DWN.	C. COOK	09-20-2013

DATE: MAY 13, 2013

CATALOG # KG1504

OUTLINE DIMENSIONS

3-PHASE INDUCTION MOTOR

TECO Westinghouse

DWG NO. 3B040C099 REV: 00