DATE MAY 28, 2009	OUTLINE DIMENSIONS	MOTOR TYPE: AEGH
CATALOG # GP0012	3-PHASE INDUCTION MOTOR	FRAME NO. 143T

Pole	HP	kW	Hz	VOLT	r/min
2	1	0.75	60	230/460	3600

Ins	Rating	Dimension in	Approx Weight	Bearings
F	CONT.	inch.	29 lbs.	DE: 6205ZZ NDE: 6204ZZ

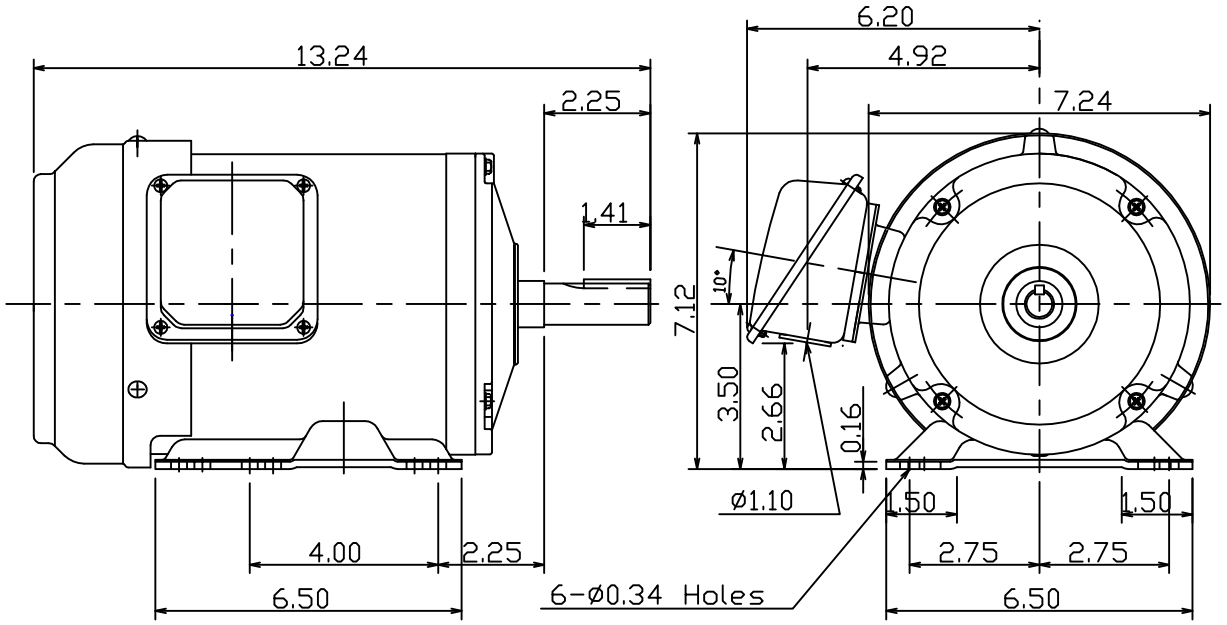

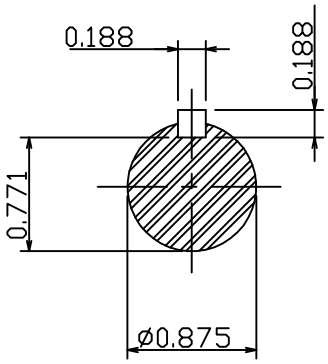

DWN.	陳奕元	04-09-09	東元電機股份有限公司 TECO Electric & Machinery Co., Ltd. TAIWAN	DWG NO. 31049Z107470
CHKD.	陳敬元	04-09-09		
APPD.	蔡明釗	04-09-09		