Uncontrolled Copy

108189

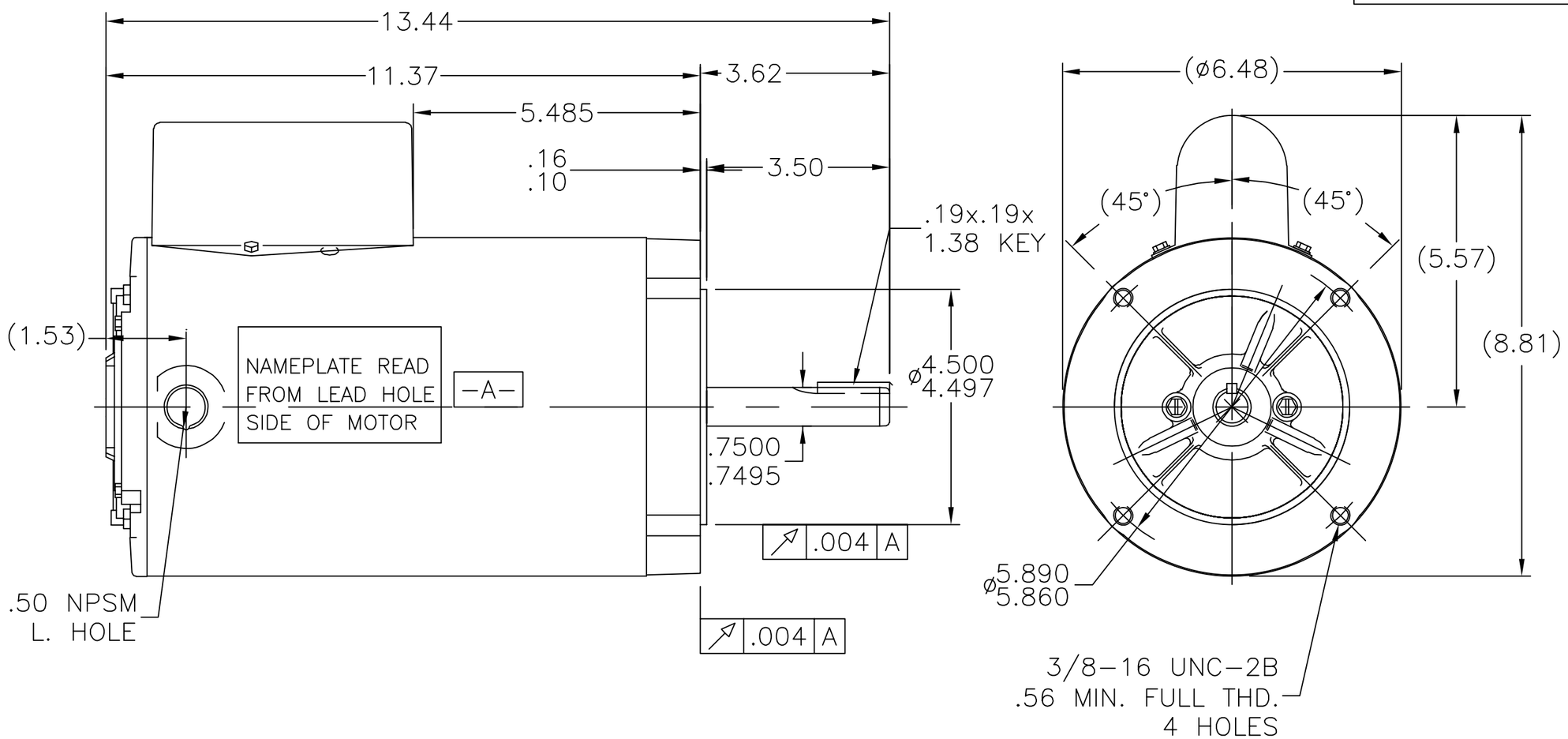

				TOLERANCES UNLESS SPECIFIED		LEESON ELECTRIC MOTORS GEARMOTORS AND DRIVES	DRAWN PST 05/16/2014
				DEC.	INCHES		CHK VS 04/25/2014
				.X	±.1		APPD
				.XX	±.03	TITLE OUTLINE	SCALE 1:1
				.XXX	±.005	56 FR. – BB – TENV – C'FACE – 1ø	REF 105879
				.XXXX	±.0005	MAT'L.	FMF A009644.00
NO.	REVISION	BY & DATE	CHK	ANG	±7'30"	FINISH	PREV

THIS DRAWING IN DESIGN AND DETAIL IS OUR PROPERTY AND MUST NOT BE USED EXCEPT IN CONNECTION WITH OUR WORK ALL RIGHTS OF DESIGN AND INVENTION ARE RESERVED
THIS IS AN ELECTRONICALLY GENERATED DOCUMENT – DO NOT SCALE THIS PRINT

RFP	CAD FILE 108189	SIZE	DRAWING NO. PAGE OF	REV.
DIST WP		A	108189	