Dimensões em polegada
Dimensions in inches

THIS IS AN UPDATED REVISION, THE PREVIOUS ONE MUST BE DISREGARDED.

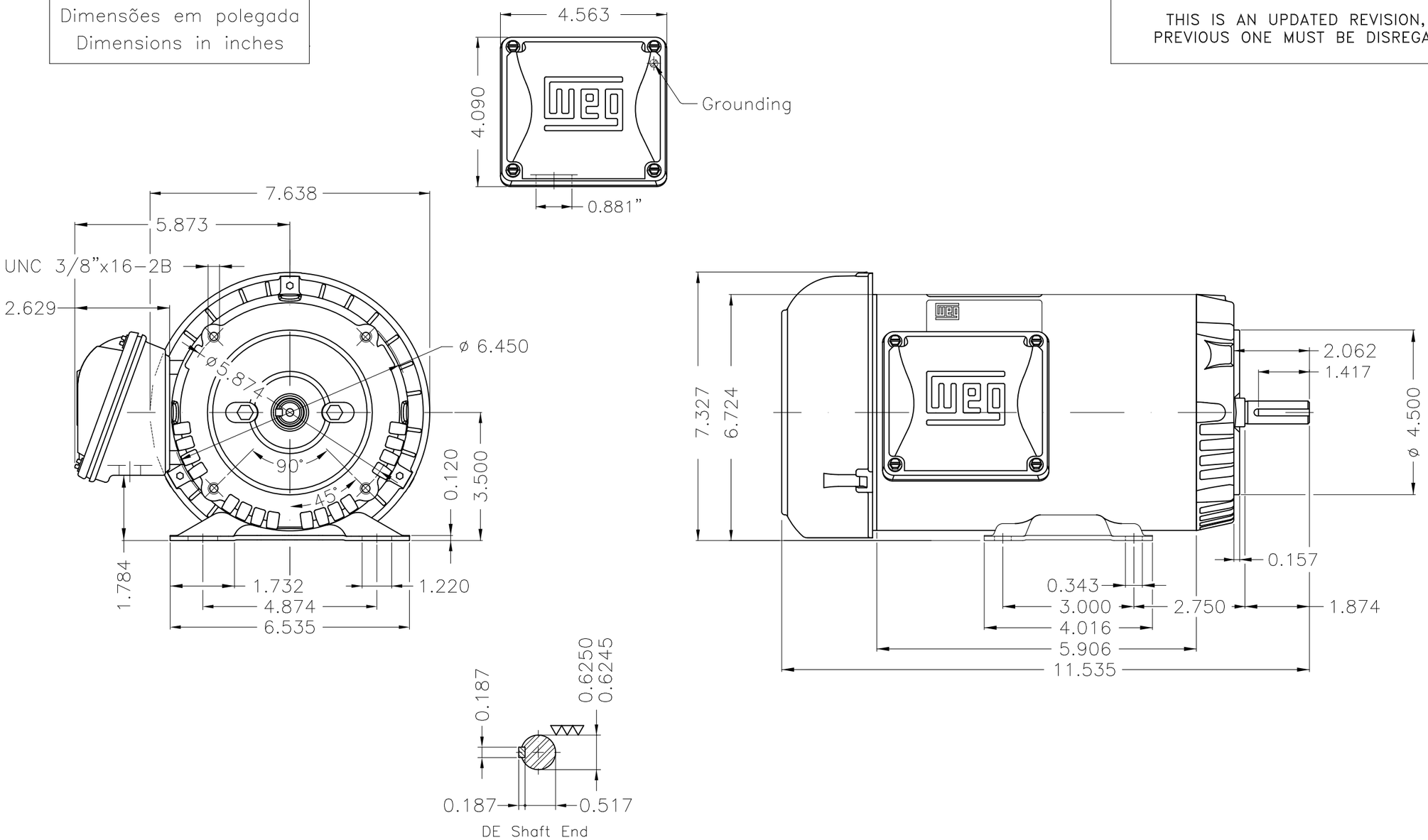

Color Munsell N 1 matte black
Painting plan 207N
Mounting F-1/B34R(D)

ECM	LOC	SUMMARY OF MODIFICATIONS	EXECUTED	CHECKED	RELEASED	DATE	VER

EXECUTED	USERADMIN	THREE PHASE MOTOR TEFC ROLLED STEEL	
CHECKED		FRAME 56C IP55 TEFC	
RELEASED		WEG code: 12805242	
REL DT	24.07.2017	WMO	Jaragua do Sul	Product Engineering	SHEET 1 / 1

0.75 HP 02 Poles 60Hz

A

ZME A3

WEG's property. Forbidden reproduction without previous authorization.