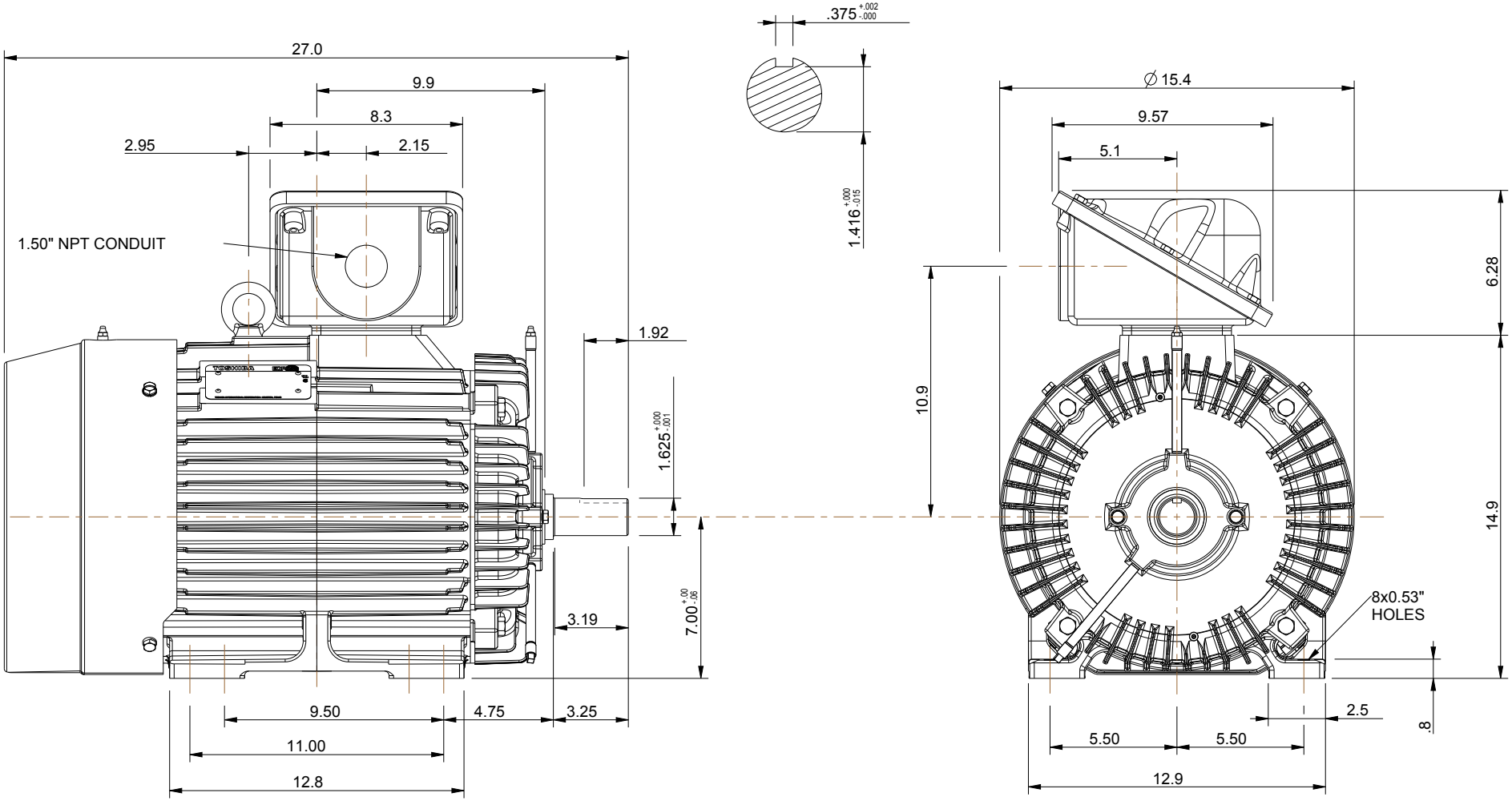

NOTES:
1. MAIN CONDUIT BOX MAY BE ROTATED IN 90° INCREMENTS
2. STANDARD PRODUCT USE BI-DIRECTIONAL FAN. OPPOSITE ROTATION AVAILABLE ONLY BY CONNECTION CHANGE.
3. KEY DIMENSIONS EQUAL 0.375" x 0.375" x 1.88" (MOTOR SUPPLIED WITH KEY)

UNITS: INCHES

TOSHIBA RESERVES THE RIGHT TO MAKE CHANGES OF TECHNICAL IMPROVEMENT WITHOUT NOTICE. DO NOT USE FOR CONSTRUCTION, INSTALLATION, OR APPLICATION PURPOSES UNLESS THE DRAWING IS CERTIFIED.

280TS TEFC FRAME F3 ASSEMBLY

MDSLV020-05

TOSHIBA
TOSHIBA INTERNATIONAL CORPORATION

TOLERANCES	
.X	.1
.XX	.03
.XXX	.005
.XXXX	.0005

MAXIMUM MOTOR WEIGHT
448 lbs.
203 kgs.

NO	REVISION	DRAWN BY	DATE	CHECK
0	FIRST ISSUE (OVERRIDE 'U' & 'R' DIMS.)	M. O'DOWD	02/03/14	

EQP Global SD
XT SERIES

DRAWN BY: M. O'DOWD
CHECK BY: J. RUSSELL
APPROVED BY:

www.toshiba.com/ind