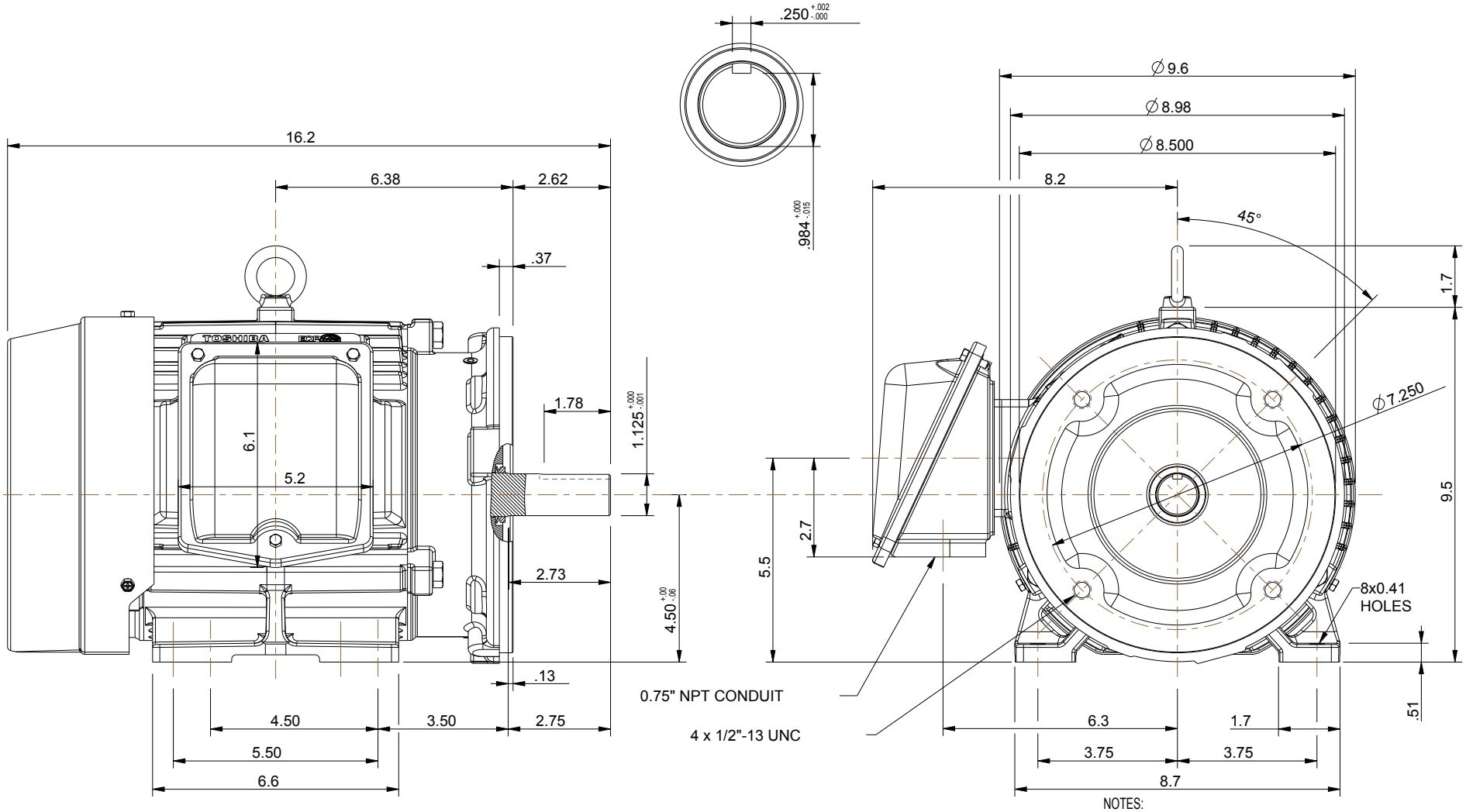

NOTES:
1. MAIN CONDUIT BOX MAY BE ROTATED IN 90° INCREMENTS
2. STANDARD PRODUCT USE BI-DIRECTIONAL FAN. OPPOSITE ROTATION AVAILABLE ONLY BY CONNECTION CHANGE.
3. KEY DIMENSIONS EQUAL 0.750" x 0.750" x 1.75" (MOTOR SUPPLIED WITH KEY)

UNITS: INCHES

TOSHIBA RESERVES THE RIGHT TO MAKE CHANGES OF TECHNICAL IMPROVEMENT WITHOUT NOTICE. DO NOT USE FOR CONSTRUCTION, INSTALLATION, OR APPLICATION PURPOSES UNLESS THE DRAWING IS CERTIFIED.

180TC NEMA-BA TEFC FRAME F1 ASSEMBLY

MDSLV005-02

TOSHIBA
TOSHIBA INTERNATIONAL CORPORATION

TOLERANCES	
.X	.1
.XX	.03
.XXX	.005
.XXXX	.0005

MAXIMUM MOTOR WEIGHT
97 lbs.
44 kgs.

NO	REVISION	DRAWN BY	DATE	CHECK
1	ADDED KEY DIMENSIONS (OVERRIDE 'R' DIM)	S. CLANCY	08/08/12	JR
0	FIRST ISSUE	N. MOMIN	10/20/10	JR

EQP Global SD
XT SERIES

DRAWN BY: N. MOMIN
CHECK BY: J. RUSSELL
APPROVED BY:

www.toshiba.com/ind